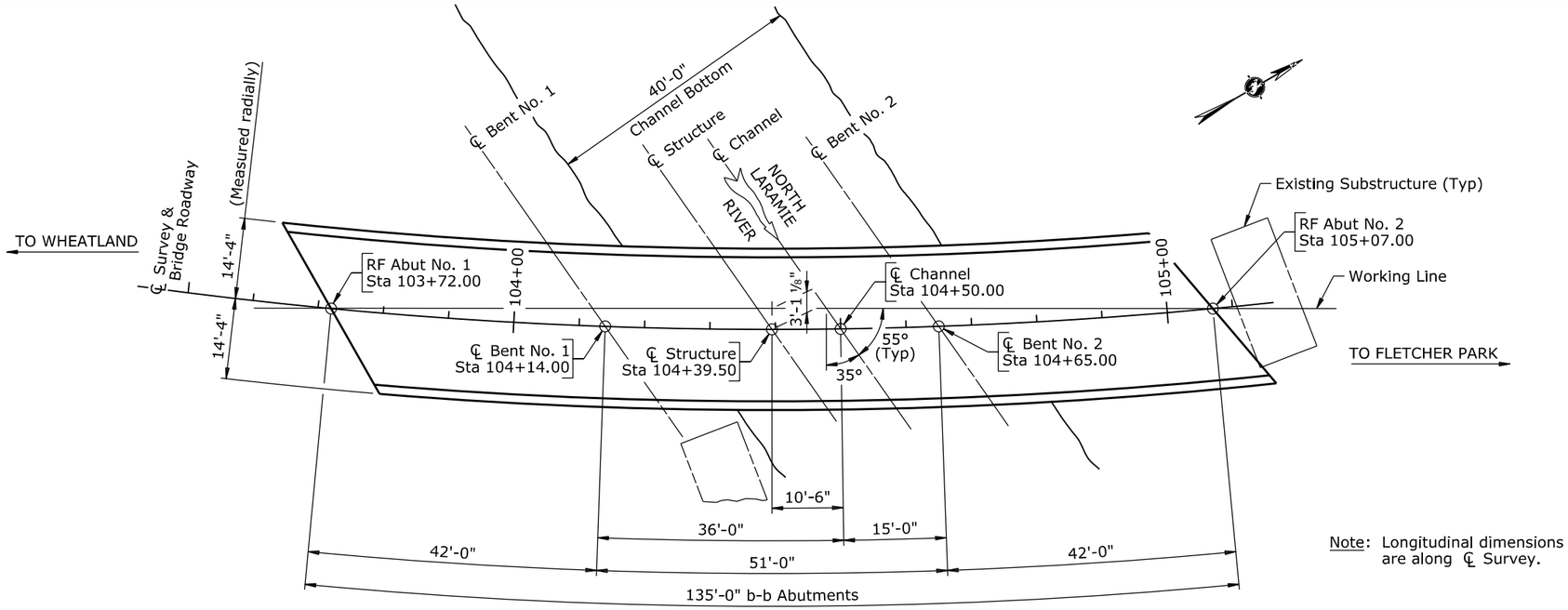

Note: Longitudinal dimensions are along ℄ Survey.

Scale: 1"=20'-0"

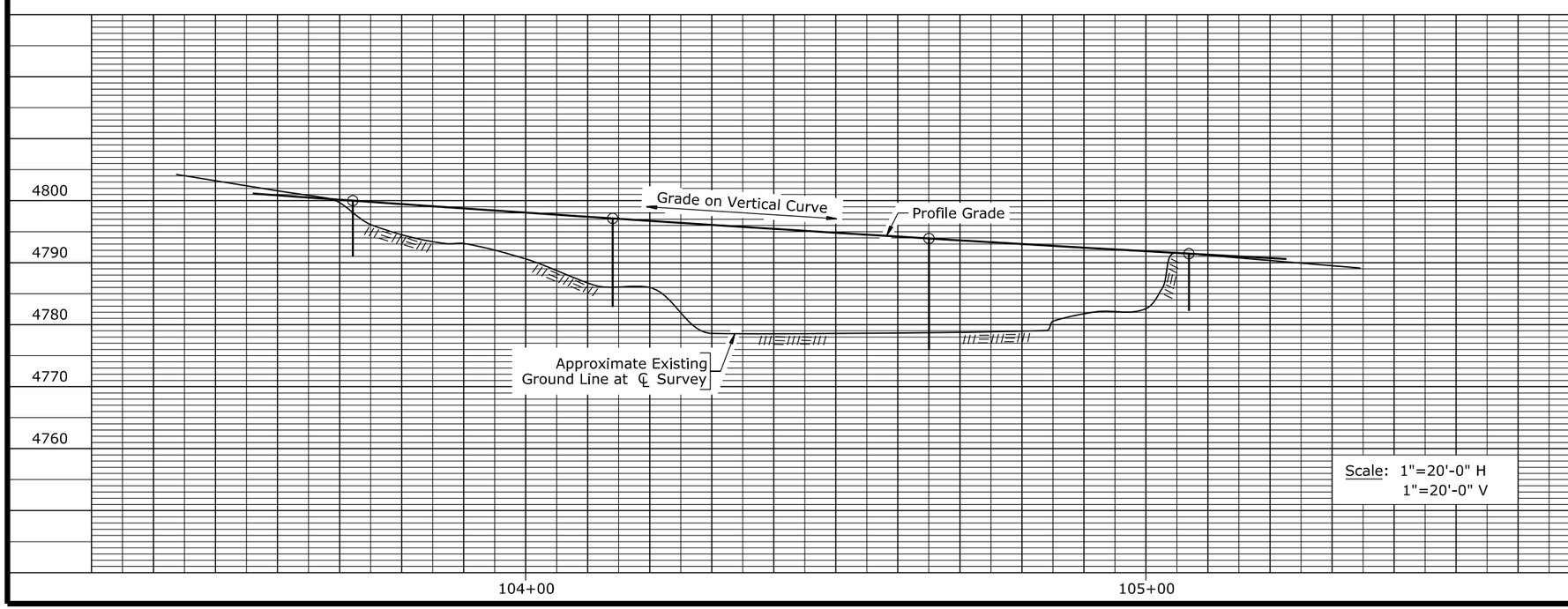

Scale: 1"=20'-0" H
1"=20'-0" V

GEOLOGY

Geologist: _____

Rig: _____

Project Geologist: _____

Date Drilled: _____

Driller: _____

Circulation Medium	
Air	
Water	
Auger	

Remarks: Obtain alkali sample.

Obtain necessary foundation information to complete LRFD design.

LAYOUT APPROVAL

State Bridge Engineer Date

WYOMING DEPARTMENT OF TRANSPORTATION
BRIDGE PROGRAM

PRELIMINARY GEOLOGY LAYOUT

BRIDGE OVER NORTH LARAMIE RIVER

STA 104+44

Fletcher Park Road

0800005 PI

DESIGN		Design Section	L M Nop
DETAIL	BBB ✓ EEE		
QTY'S		Drwg No.	Sheet 1 of 1

0800005_1pg.dgn

Wyo. Proj.	0800005	
Sheet	of	Sheets

BRIDGE OVER NORTH LARAMIE RIVER

STA 104+44

FLETCHER PARK ROAD

0800005 PLATTE COUNTY

PRELIMINARY

DESIGN DATA

SPECIFICATIONS: AASHTO LRFD Bridge Design Specifications, 8th Edition. AASHTO Guide Specifications for LRFD Seismic Bridge Design, 2nd Edition.

ADT: 50 (Year 2013)

LOADING: HL93. Future wearing surface 25 psf. Stay-in-place forms 15 psf.

REINFORCED CONCRETE: Load and Resistance Factor Design -
Class A Concrete f'_c = 4000 psi
Reinforcing Steel f_y = 60,000 psi (Grade 60)

STRUCTURAL STEEL: Load and Resistance Factor Design -
F_y = 50,000 psi (Grade 50W)

APPROACH ROADWAY WIDTH: 25'-4"

FOOTING PRESSURES: Load and Resistance Factor Design -
Abutment No. 1, X Tsf

PILE LOADS: Load and Resistance Factor Design -
Abutment No. 2, X T per pile
Bents, X T per pile

ELASTOMERIC BEARING LOADS: Load and Resistance Factor Design -
Bents: Service Dead Load = X kips
Service Live Load = X kips

SEISMIC CRITERIA: Seismic Design Category X
Effective Peak Ground Acceleration Coefficient, A_s=X.XXX
Design Earthquake Response Spectral Acceleration Coefficient for 1.0 Second Period, S_{D1} = X.XXX
Design Earthquake Response Spectral Acceleration Coefficient for 0.2 Second Period, S_{DS} = X.XXX
Site Class X
5% Damping

ESTIMATED QUANTITIES - CODE 11-DQQ

ITEM NO.	ITEM	UNIT	TOTAL QUANTITY	ESTIMATE
202.03210	REMOVAL OF STEEL BRIDGES	EA	X	
212.02100	DRY EXCAVATION	CY	X	
212.03900	PERVIOUS BACKFILL MATERIAL	CY	X	
217.01010	GEOTEXTILE, EROSION CONROL	SY	X	
501.01000	STRUCTURAL STEEL	LS	LUMP SUM	X LB
503.01000	BRIDGE RAILING	FT	X	
504.04000	PREDRILLED HOLES	FT	X	
504.04010	PILE SPLICES	EA	X	
504.11042	STEEL PILING HP 10 X 42	FT	X	
504.11473	STEEL PILING HP 14 X 73	FT	X	
511.06000	MACHINE-PLACED RIPRAP	CY	X	
513.00005	CLASS A CONCRETE	LS	LUMP SUM	X CY
514.00015	REINFORCING STEEL	LS	LUMP SUM	X LB
514.00025	REINFORCING STEEL (COATED)	LS	LUMP SUM	X LB
900.60000	CONTRACTOR QUALITY CONTROL (CONCRETE)	LS	LUMP SUM	

INDEX OF DRAWINGS

Drawing: Sheet No.
Title Sheet ---------- 1
General Notes ---------- 2
General Plan and Elevation ---------- 3
Substructure Layout ---------- 4
Riprap Details ---------- 5
Log Boring Sheet ---------- 6
Abutment No. 1 Details ---------- 7
Abutment No. 2 Details ---------- 8
Bent No. 1 Details ---------- 9
Bent No. 2 Details ---------- 10
Superstructure Details ---------- 11-13
Bridge Railing Details ---------- 14-15
Slab Details ---------- 16-17
Reference Sheets ---------- BX-BX

STRUCTURE NO. KEX
ML8079B, RM 1.43
SEC 69, T6N, R25W

WYOMING DEPARTMENT OF TRANSPORTATION
BRIDGE PROGRAM
REVISIONS

REVIEW	DESIGN BBB ✓ EEE	Design Section L M Nop
APPROVAL	DETAIL / QTY'S	Drwg No. P-0003 Sheet 1 of 3

0800005_1pl1.dgn

Wyo. Proj.	0800005	
Sheet	of	Sheets

GENERAL NOTES

SPECIFICATIONS: WYDOT Standard Specifications for Road and Bridge Construction, 2010 Edition.

DIMENSIONS: Longitudinal dimensions for the substructure are horizontal and include no correction for grade. Longitudinal dimensions for the superstructure are along grade unless noted. Slopes are vertical : horizontal.

ENVIRONMENTAL RESTRICTIONS: In-stream construction activity is prohibited from April 1 to July 15 and from October 1 to November 30.

CONCRETE: Use class A concrete made with type II Wyoming modified cement at all locations.

REINFORCING STEEL: Ensure reinforcing steel conforms to ASTM A 615 (Grade 60) for all bars, including ties and stirrups. Concrete cover to face of reinforcing steel is 2" unless noted. Dimensions for bent bars are out to out. Ensure bars marked with an asterisk (*) are coated.

BAR MARKS

Straight Bars: Size — Length (508-3)

Bent Bars: Size — Designation (4A2)

STRUCTURAL STEEL: Ensure structural steel conforms to ASTM A 709 (Grade 50W) unless noted. Ensure steel fabricators supplying structural components are certified under the AISC Quality Certification Program for Steel Bridge Fabricators - 2011, Category Intermediate Bridges (IBR).

Ensure cutwater angles and pile bracing conform to ASTM A 709 (Grade 50W).

BRIDGE BEARING ANCHOR BOLTS: Anchor bolts may be swedge bolts or threaded rods. Ensure swedge bolts conform to ASTM A 709 (Grade 36) and swedges are produced by deforming the steel through application of pressure and not by any method that removes material, such as grinding or cutting. Ensure threaded rods conform to ASTM F 1554 (Grade 36) minimum. Ensure anchor bolts, or threaded rods, and nuts are galvanized in accordance with Subsection 815.14, Galvanized Coating. Use anchor bolts compatible with the adhesive anchorage system.

Use one of the following adhesive anchorage systems to set anchor bolts in drilled holes:
- CIA-GEL 6000-GP as manufactured by MiTek USA, Inc.
- Red Head C6+ as manufactured by ITW Commercial Construction
- Sure Anchor I J-51 as manufactured by Dayton Superior
- HIT-RE 500 V3 as manufactured by Hilti, Inc.

Drill and prepare holes and install the anchor bolts in accordance with the adhesive system manufacturer's recommendations. Work necessary for the adhesive anchorage system is incidental to the contract pay item Structural Steel.

STEEL PILING: At Abutment No. 2, use steel piles conforming to ASTM A 709 (Grade 36). At bents, use steel piles conforming to ASTM A 709 (Grade 50W).

WEEP HOLE ASSEMBLIES: Work necessary for the weep hole assemblies is incidental to the contract pay item Class B Concrete.

EYEBOLTS: Use galvanized bar conforming to ASTM A 709 (Grade 36). Work necessary for the eyebolts is incidental to the contract pay item Class A Concrete.

REMOVAL OF STEEL BRIDGES: Remove the existing simple span 89'-0" x 13'-0" steel girder bridge, Structure No. DQQ.

HAZARDOUS MATERIALS: The paint system on the steel components of the existing structure may contain materials including lead and chromium which are hazardous if ingested, inhaled, or otherwise absorbed.

DRY EXCAVATION: The estimated quantity of dry excavation is calculated below existing ground line at Abutment No. 1.

FOUNDATIONS: Abutment No. 1 is on a footing founded in clayey sandstone and sandy shale. An inspector will make recommendations regarding adequate embedment into bedrock.

Abutment No. 2 and bents are on steel piles driven to refusal in cemented clayey sandstone.

SEISMIC VELOCITY DATA: Excavation into unweathered bedrock will be required at Abutment No. 1. The following seismic velocity data has been included to aid in determining the difficulty of the excavation.

SEISMIC VELOCITY DATA

Location	Layer	Velocity	Depth to Layer	
			Right	Left
Sta 103+72 25.0' Right - 25.0' Left	1	1322 fps	—	—
	2	3959 fps	4.6'	2.7'

PREDRILLED HOLES: If any pile fails to achieve the bottom of pile elevations shown, predrill the remaining holes to the elevations shown. The estimated quantity of predrilled holes is calculated below the bottom of the cap at Abutment No. 2 and below existing ground line at bents.

PILE POINTS: Pile points are not required if predrilled holes are used.

MACHINE-PLACED RIPRAP: Use stones conforming to class X gradation requirements from a contractor furnished source.

STAY-IN-PLACE FORMS: Stay-in-place slab forms may be used for construction of the deck. Do not exceed 15 psf for the weight of the forms and additional concrete, including form deflection. Do not extend the vertical legs of support angles past the bottom of the bottom reinforcing steel mat or use these legs to support the reinforcing steel.

BRIDGE OFFICE NOTIFICATION: The engineer will notify the State Bridge Engineer in writing within 14 calendar days after the existing structure has been removed and again within 14 calendar days after the new structure has been opened to traffic.

STREAM DATA

Drainage Area	376.0 Sq Mi
Channel Slope	0.30%
Description of Channel Material	Sand and gravel
Drift Potential	Large trees and logs
Ordinary High Water Elevation	4779.5 ft
Headwater Elevation Q_{25}	4785.3 ft
Q_{100}	4786.4 ft
High Water Elevation Q_{25}	4784.5 ft
Q_{100}	4786.3 ft
Design Scour Elevation	XXXX.X ft
Constricted Velocity Q_{25}	2.5 fps
Q_{100}	2.8 fps
Design Frequency	25 Year
Design Discharge Q_{25}	5290 cfs
Review Discharge Q_{100}	10,600 cfs
Source of Discharge	Log Pearson Type III
Method of Analysis	WSPRO
Flood of Record	9260 cfs (Year 1951)

REFERENCES

WYDOT Plans:	Sheet No.
Bridge Drwg No. 2498	1 & 2 of 2

Supplementary Specifications:

SS-100K	Adjustment for Structural Steel
SS-500B	Welder Qualification
SS-500E	Bridge Bearing Correction
SS-500G	Structural Concrete with Quality Control and Quality Acceptance

WYOMING DEPARTMENT OF TRANSPORTATION
BRIDGE PROGRAM

REVISIONS

PRELIMINARY GENERAL NOTES

BRIDGE OVER NORTH LARAMIE RIVER

STA 104+44

Fletcher Park Road

0800005 PI

REVIEW ____ APPROVAL ____

DESIGN ____ ✓ ____
DETAIL BBB ✓ EEE
QTY'S ____ ✓ ____

Design Section L M Nop

Drwg No. P-0003 Sheet 2 of 3

0800005_1pl2.dgn

Wyo. Proj.	0800005
Sheet	of Sheets

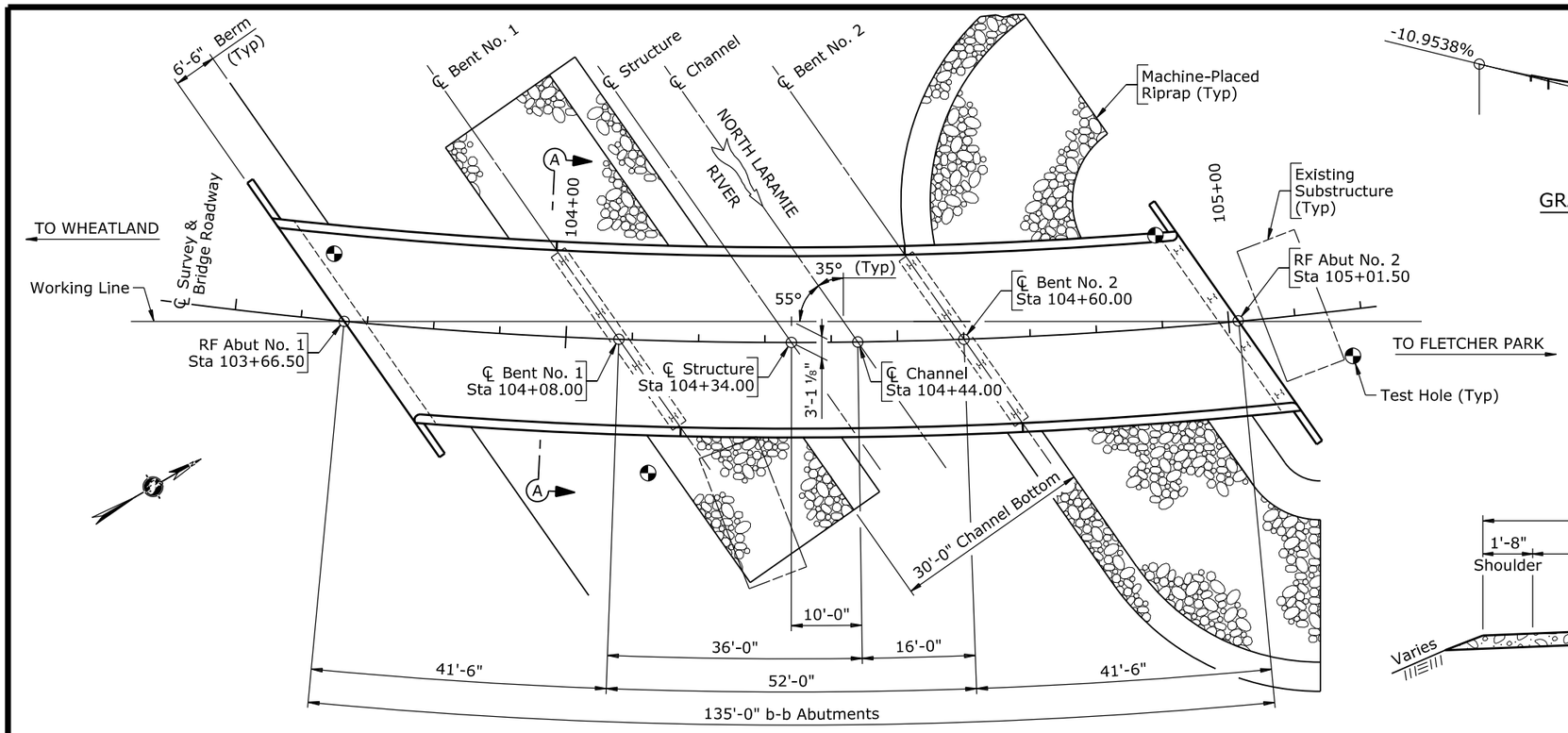

PLAN

(Longitudinal dimensions are along ℄ Survey)

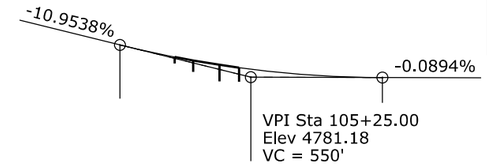

GRADE DATA

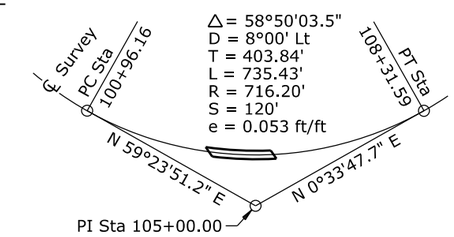

HORIZONTAL CURVE DATA

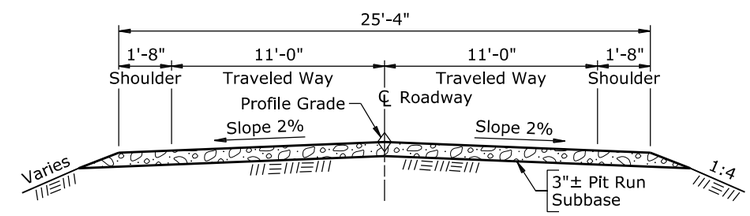

TYPICAL ROADWAY SECTION

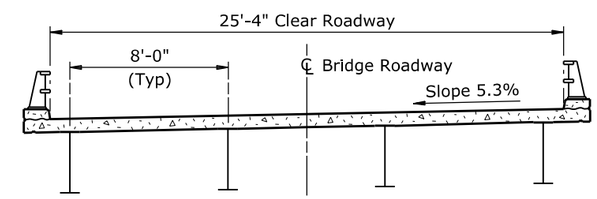

SECTION A-A

(Shown radially)

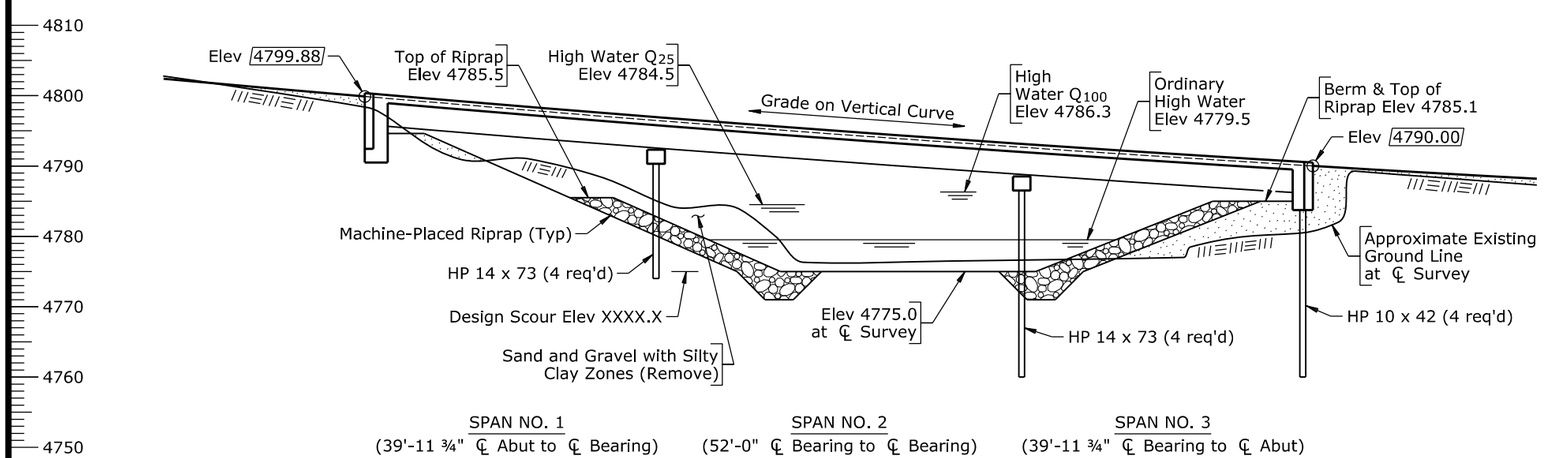

ELEVATION

(3 Cont W Girder Spans)

Note: 1) Elevations shown as 4790.00 indicate finished grade at rear face abutment on ℄ Bridge Roadway.
2) Berm slopes are 1:2±, measured perpendicular to ℄ Channel.
3) Replace the existing bridge, Structure No. DQQ, with the new bridge, Structure No. KEX.

WYOMING DEPARTMENT OF TRANSPORTATION
BRIDGE PROGRAM

REVISIONS

PRELIMINARY LAYOUT

BRIDGE OVER NORTH LARAMIE RIVER

STA 104+44

Fletcher Park Road

0800005 PI

REVIEW	DESIGN	Design Section L M Nop
	DETAIL AAA ✓ GGG	
APPROVAL	QTY'S	Drwg No. P-0003 Sheet 3 of 3

0800005_1pl3.dgn

Wyo. Proj.	0800005		
Sheet	B1	of	B21 Sheets

BRIDGE OVER NORTH LARAMIE RIVER

STA 104+44

FLETCHER PARK ROAD

0800005 PLATTE COUNTY

DESIGN DATA

SPECIFICATIONS: AASHTO LRFD Bridge Design Specifications, 8th Edition. AASHTO Guide Specifications for LRFD Seismic Bridge Design, 2nd Edition.

ADT: 50 (Year 2013)

LOADING: HL93. Future wearing surface 25 psf. Stay-in-place forms 15 psf.

REINFORCED CONCRETE: Load and Resistance Factor Design -
Class A Concrete f'_c = 4000 psi
Reinforcing Steel f_y = 60,000 psi (Grade 60)

STRUCTURAL STEEL: Load and Resistance Factor Design -
F_y = 50,000 psi (Grade 50W)

APPROACH ROADWAY WIDTH: 25'-4"

FOOTING PRESSURES: Load and Resistance Factor Design -
Abutment No. 1, 2.0 Tsf

PILE LOADS: Load and Resistance Factor Design -
Abutment No. 2, 52.4 T per pile
Bents, 49.3 T per pile

ELASTOMERIC BEARING LOADS: Load and Resistance Factor Design -
Bents: Service Dead Load = 102.4 kips
Service Live Load = 97.7 kips

SEISMIC CRITERIA: Seismic Design Category X
Effective Peak Ground Acceleration Coefficient, A_s =X.XXX
Design Earthquake Response Spectral Acceleration Coefficient for 1.0 Second Period, S_{D1} = X.XXX
Design Earthquake Response Spectral Acceleration Coefficient for 0.2 Second Period, S_{DS} = X.XXX
Site Class X
5% Damping

ESTIMATED QUANTITIES - CODE 11-DQQ

ITEM NO.	ITEM	UNIT	TOTAL QUANTITY	ESTIMATE
202.03210	REMOVAL OF STEEL BRIDGES	EA	1	
212.02100	DRY EXCAVATION	CY	80	
212.03900	PERVIOUS BACKFILL MATERIAL	CY	15	
217.01010	GEOTEXTILE, EROSION CONROL	SY	2310	
501.01000	STRUCTURAL STEEL	LS	LUMP SUM	85,600 LB
503.01000	BRIDGE RAILING	FT	271	
504.04000	PREDRILLED HOLES	FT	200	
504.04010	PILE SPLICES	EA	1	
504.11042	STEEL PILING HP 10 X 42	FT	96	
504.11473	STEEL PILING HP 14 X 73	FT	208	
511.06000	MACHINE-PLACED RIPRAP	CY	640	
513.00005	CLASS A CONCRETE	LS	LUMP SUM	170.7 CY
514.00015	REINFORCING STEEL	LS	LUMP SUM	5730 LB
514.00025	REINFORCING STEEL (COATED)	LS	LUMP SUM	28,350 LB
900.60000	CONTRACTOR QUALITY CONTROL (CONCRETE)	LS	LUMP SUM	

INDEX OF DRAWINGS

Drawing: Sheet No.
Title Sheet ---------- 1
General Notes ---------- 2
General Plan and Elevation ---------- 3
Substructure Layout ---------- 4-5
Riprap Details ---------- 6
Log Boring Sheet ---------- 7
Abutment No. 1 Details ---------- 8
Abutment No. 2 Details ---------- 9
Bent No. 1 Details ---------- 10
Bent No. 2 Details ---------- 11
Superstructure Details ---------- 12-14
Bridge Railing Details ---------- 15-16
Slab Details ---------- 17-19
Reference Sheets ---------- B20-B21

STRUCTURE NO. KEX
ML8079B, RM 1.43
SEC 69, T6N, R25W

WYOMING DEPARTMENT OF TRANSPORTATION
BRIDGE PROGRAM
REVISIONS

REVIEW	DESIGN ✓	Design Section	L M Nop
	DETAIL AAA ✓ GGG		
APPROVAL	QTY'S ✓	Drwg No. 0003	Sheet 1 of 19

0800005_1ts.dgn

GENERAL NOTES

SPECIFICATIONS: WYDOT Standard Specifications for Road and Bridge Construction, 2010 Edition.

DIMENSIONS: Longitudinal dimensions for the substructure are horizontal and include no correction for grade. Longitudinal dimensions for the superstructure are along grade unless noted. Slopes are vertical : horizontal.

ENVIRONMENTAL RESTRICTIONS: In-stream construction activity is prohibited from April 1 to July 15 and from October 1 to November 30.

CONCRETE: Use class A concrete made with type II Wyoming modified cement at all locations.

REINFORCING STEEL: Ensure reinforcing steel conforms to ASTM A 615 (Grade 60) for all bars, including ties and stirrups. Concrete cover to face of reinforcing steel is 2" unless noted. Dimensions for bent bars are out to out. Ensure bars marked with an asterisk (*) are coated.

BAR MARKS

Straight Bars: Size — Length, 508-3

Bent Bars: Size — Designation, 4A2

STRUCTURAL STEEL: Ensure structural steel conforms to ASTM A 709 (Grade 50W) unless noted. Ensure steel fabricators supplying structural components are certified under the AISC Quality Certification Program for Steel Bridge Fabricators - 2011, Category Intermediate Bridges (IBR).

Ensure cutwater angles and pile bracing conform to ASTM A 709 (Grade 50W).

BRIDGE BEARING ANCHOR BOLTS: Anchor bolts may be swedge bolts or threaded rods. Ensure swedge bolts conform to ASTM A 709 (Grade 36) and swedges are produced by deforming the steel through application of pressure and not by any method that removes material, such as grinding or cutting. Ensure threaded rods conform to ASTM F 1554 (Grade 36) minimum. Ensure anchor bolts, or threaded rods, and nuts are galvanized in accordance with Subsection 815.14, Galvanized Coating. Use anchor bolts compatible with the adhesive anchorage system.

Use one of the following adhesive anchorage systems to set anchor bolts in drilled holes:
- CIA-GEL 6000-GP as manufactured by MiTek USA, Inc.
- Red Head C6+ as manufactured by ITW Commercial Construction
- Sure Anchor I J-51 as manufactured by Dayton Superior
- HIT-RE 500 V3 as manufactured by Hilti, Inc.

Drill and prepare holes and install the anchor bolts in accordance with the adhesive system manufacturer's recommendations. Work necessary for the adhesive anchorage system is incidental to the contract pay item Structural Steel.

STEEL PILING: At Abutment No. 2, use steel piles conforming to ASTM A 709 (Grade 36). At bents, use steel piles conforming to ASTM A 709 (Grade 50W).

WEEP HOLE ASSEMBLIES: Work necessary for the weep hole assemblies is incidental to the contract pay item Class B Concrete.

EYEBOLTS: Use galvanized bar conforming to ASTM A 709 (Grade 36). Work necessary for the eyebolts is incidental to the contract pay item Class A Concrete.

REMOVAL OF STEEL BRIDGES: Remove the existing simple span 89'-0" x 13'-0" steel girder bridge, Structure No. DQQ.

HAZARDOUS MATERIALS: The paint system on the steel components of the existing structure may contain materials including lead and chromium which are hazardous if ingested, inhaled, or otherwise absorbed.

DRY EXCAVATION: The estimated quantity of dry excavation is calculated below existing ground line at Abutment No. 1.

FOUNDATIONS: Abutment No. 1 is on a footing founded in clayey sandstone and sandy shale. An inspector will make recommendations regarding adequate embedment into bedrock.

Abutment No. 2 and bents are on steel piles driven to refusal in cemented clayey sandstone.

SEISMIC VELOCITY DATA: Excavation into unweathered bedrock will be required at Abutment No. 1. The following seismic velocity data has been included to aid in determining the difficulty of the excavation.

SEISMIC VELOCITY DATA

Location	Layer	Velocity	Depth to Layer	
			Right	Left
Sta 103+72 25.0' Right - 25.0' Left	1	1322 fps	—	—
	2	3959 fps	4.6'	2.7'

PREDRILLED HOLES: If any pile fails to achieve the bottom of pile elevations shown, predrill the remaining holes to the elevations shown. The estimated quantity of predrilled holes is calculated below the bottom of the cap at Abutment No. 2 and below existing ground line at bents.

PILE POINTS: Pile points are not required if predrilled holes are used.

MACHINE-PLACED RIPRAP: Use stones conforming to class X gradation requirements from a contractor furnished source.

STAY-IN-PLACE FORMS: Stay-in-place slab forms may be used for construction of the deck. Do not exceed 15 psf for the weight of the forms and additional concrete, including form deflection. Do not extend the vertical legs of support angles past the bottom of the bottom reinforcing steel mat or use these legs to support the reinforcing steel.

BRIDGE OFFICE NOTIFICATION: The engineer will notify the State Bridge Engineer in writing within 14 calendar days after the existing structure has been removed and again within 14 calendar days after the new structure has been opened to traffic.

STREAM DATA

Drainage Area	376.0 Sq Mi
Channel Slope	0.30%
Description of Channel Material	Sand and gravel
Drift Potential	Large trees and logs
Ordinary High Water Elevation	4779.5 ft
Headwater Elevation Q_{25}	4785.3 ft
Q_{100}	4786.4 ft
High Water Elevation Q_{25}	4784.5 ft
Q_{100}	4786.3 ft
Design Scour Elevation	XXXX.X ft
Constricted Velocity Q_{25}	2.5 fps
Q_{100}	2.8 fps
Design Frequency	25 Year
Design Discharge Q_{25}	5290 cfs
Review Discharge Q_{100}	10,600 cfs
Source of Discharge	Log Pearson Type III
Method of Analysis	WSPRO
Flood of Record	9260 cfs (Year 1951)

REFERENCES

WYDOT Plans:	Sheet No.
Bridge Drwg No. 2498	1 & 2 of 2

Supplementary Specifications:
- SS-100K Adjustment for Structural Steel
- SS-500B Welder Qualification
- SS-500E Bridge Bearing Correction
- SS-500G Structural Concrete with Quality Control and Quality Acceptance

WYOMING DEPARTMENT OF TRANSPORTATION
BRIDGE PROGRAM

REVISIONS

GENERAL NOTES

BRIDGE OVER NORTH LARAMIE RIVER

STA 104+44

Fletcher Park Road

0800005 PI

REVIEW ____ APPROVAL ____

DESIGN ____ ✓ ____
DETAIL AAA ✓ GGG
QTY'S ____ ✓ ____

Design Section L M Nop

Drwg No. 0003 Sheet 2 of 19

0800005_1gn.dgn

Wyo. Proj.	0800005		
Sheet	B3	of	B21 Sheets

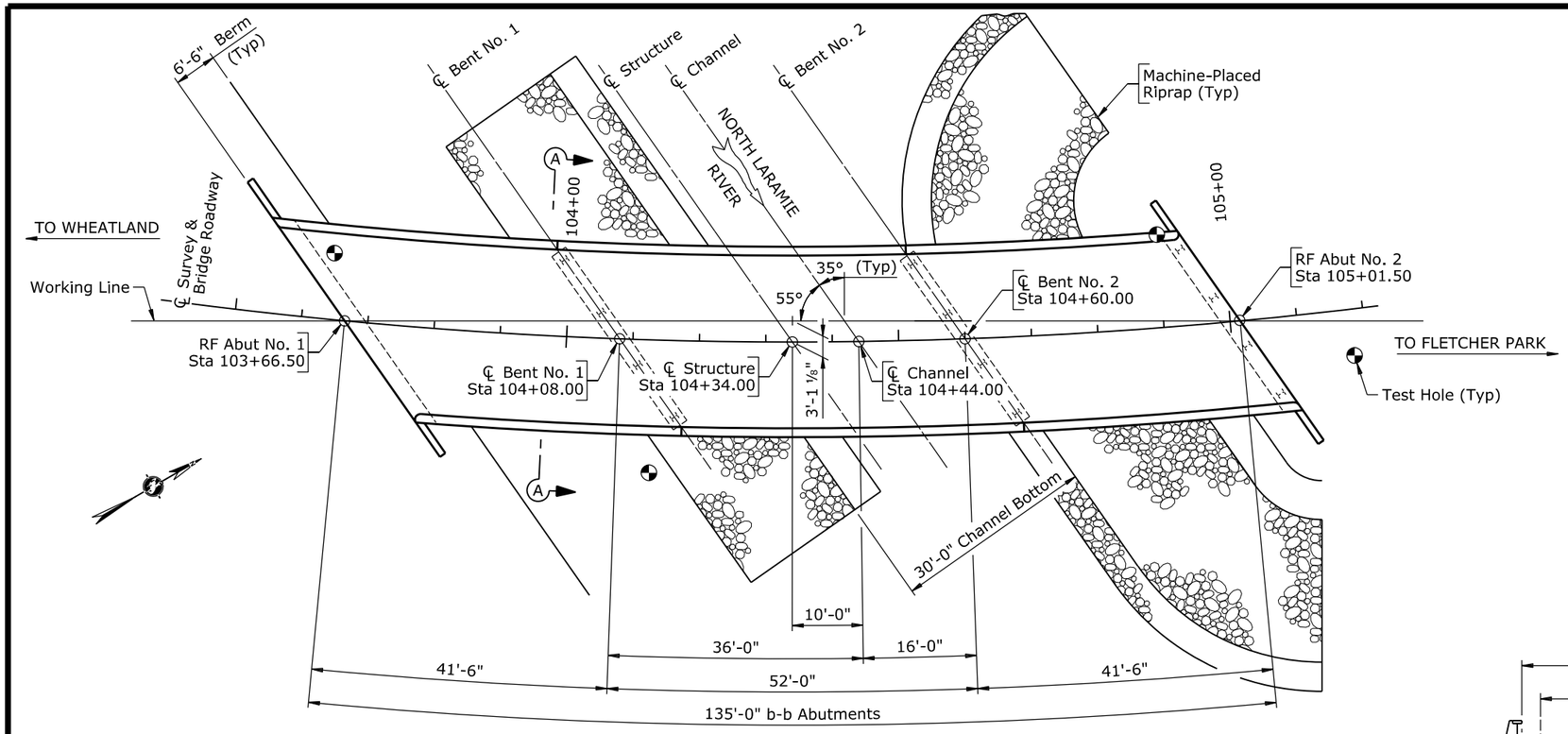

PLAN

(Longitudinal dimensions are along ℄ Survey)

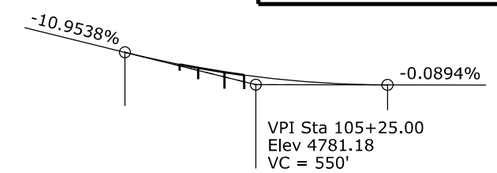

GRADE DATA

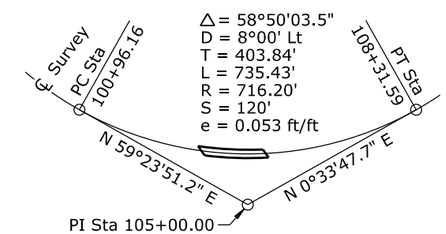

HORIZONTAL CURVE DATA

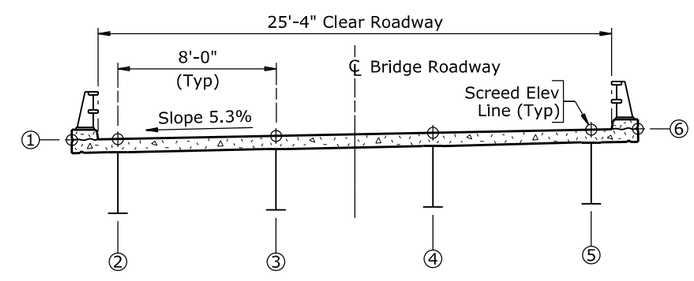

SECTION A-A

(Shown radially)

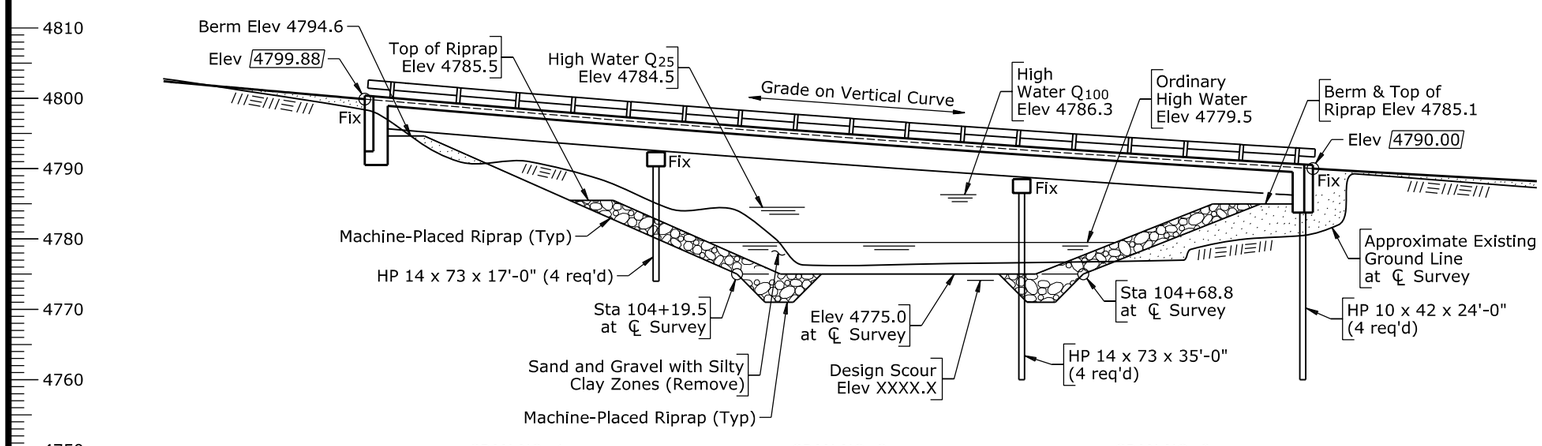

ELEVATION

(3 Cont W Girder Spans)

Note: 1) Elevations shown as 4790.00 indicate finished grade at rear face abutment on ℄ Bridge Roadway.
2) Berm slopes are 1:2±, measured perpendicular to ℄ Channel.

WYOMING DEPARTMENT OF TRANSPORTATION
BRIDGE PROGRAM

REVISIONS

GENERAL PLAN AND ELEVATION

BRIDGE OVER NORTH LARAMIE RIVER

STA 104+44

Fletcher Park Road

0800005 PI

REVIEW	DESIGN	Design Section	L M Nop
APPROVAL	DETAIL AAA ✓ GGG	Drwg No. 0003	Sheet 3 of 19
	QTY'S		

0800005_1gp.dgn

Wyo. Proj.	0800005		
Sheet	B4	of	B21 Sheets

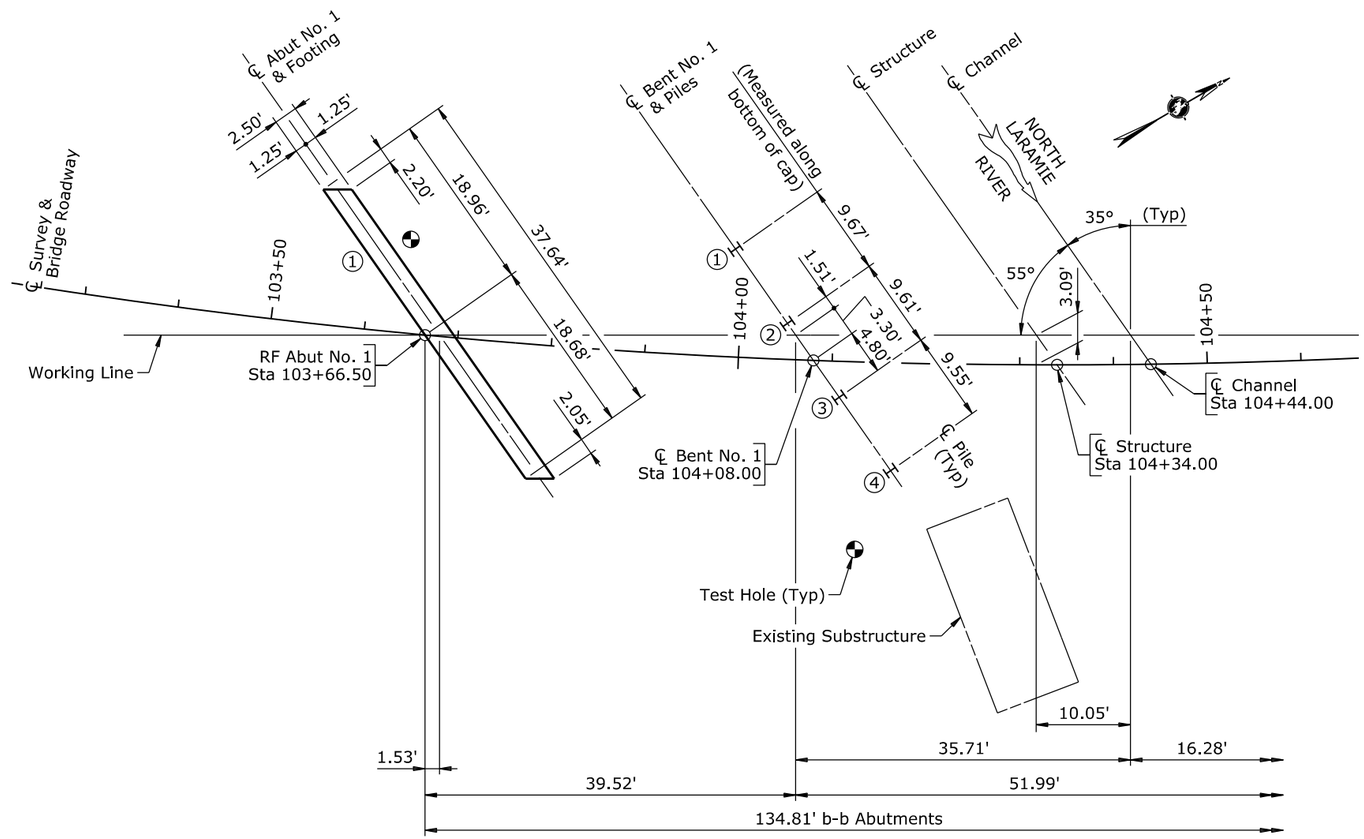

HALF SUBSTRUCTURE LAYOUT
(Longitudinal dimensions are along working line)

SUBSTRUCTURE DATA			
Location	Pile Elevations		Bottom of Footing Elevation
	Piles No. ① - ④		Footing No. ①
	Top	Bottom	
Abut No. 1	——	——	4792.00
Bent No. 1	4791.83	4774.83	——

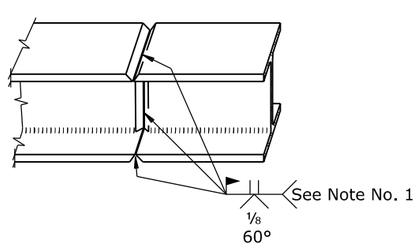

WELDED SPLICE DETAIL
(Piles welded horizontal)

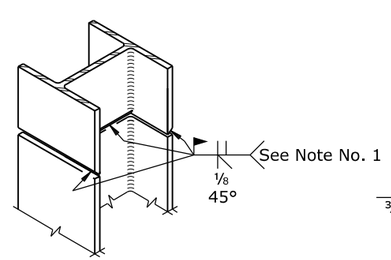

WELDED SPLICE DETAIL
(Piles welded vertical)

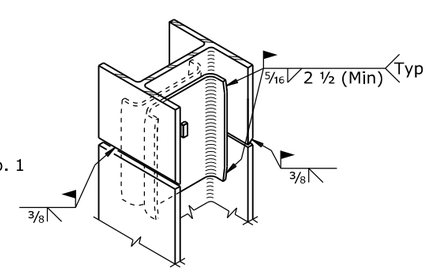

PILE SPLICER DETAIL
(Piles vertical or horizontal)

PILE SPLICE DETAILS

Note: 1) Gouge root to sound metal before welding second side.
2) Piles at Bent No. 1 are HP 14 x 73.
3) Piles No. ① and ④ at Bent No. 1 are battered.

WYOMING DEPARTMENT OF TRANSPORTATION
BRIDGE PROGRAM

REVISIONS

SUBSTRUCTURE LAYOUT

BRIDGE OVER NORTH LARAMIE RIVER

STA 104+44

Fletcher Park Road

0800005 Pl

REVIEW	DESIGN	Design Section	L M Nop
	DETAIL AAA ✓ GGG	Drwg No. 0003	Sheet 4 of 19
APPROVAL	QTY'S		

0800005_1sb1.dgn

Wyo. Proj.	0800005		
Sheet	B5	of	B21 Sheets

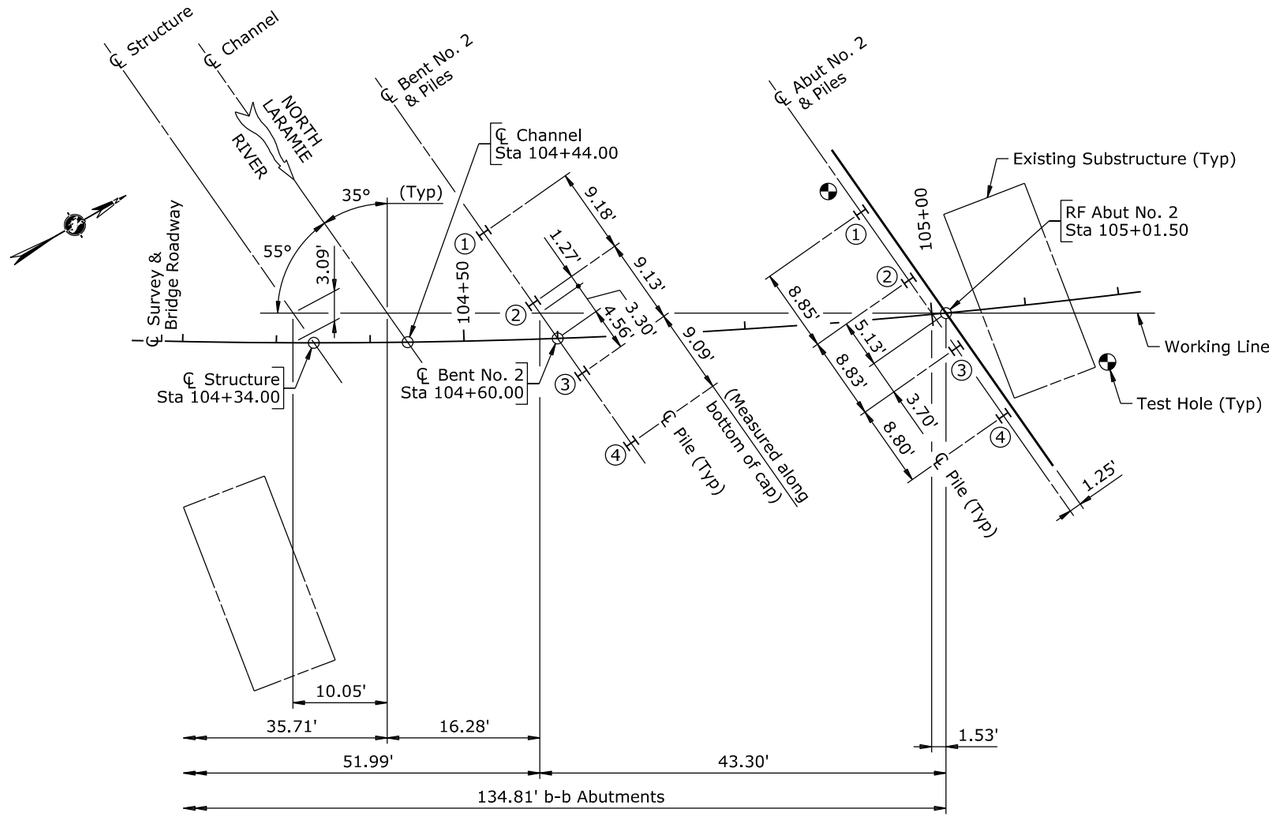

HALF SUBSTRUCTURE LAYOUT
(Longitudinal dimensions are along working line)

SUBSTRUCTURE DATA		
Location	Pile Elevations	
	Piles No. ① - ④	
	Top	Bottom
Bent No. 2	4787.99	4752.99
Abut No. 2	4784.62	4760.62

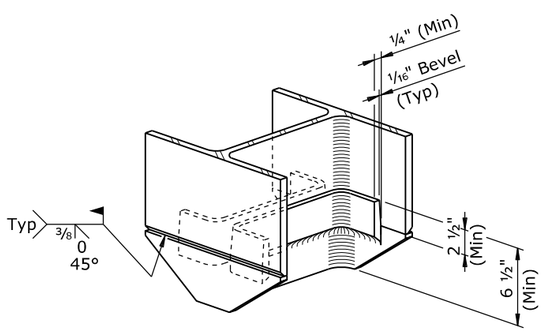

PILE POINT DETAIL
(8 required for HP 14 x 73 at bents)

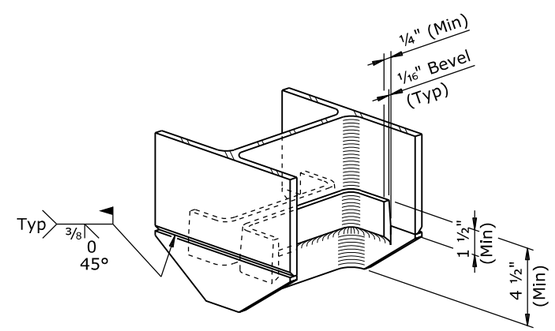

PILE POINT DETAIL
(4 required for HP 10 x 42 at Abut No. 2)

Note: 1) Piles at Bent No. 2 are HP 14 x 73.
2) Piles at Abutment No. 2 are HP 10 x 42.
3) Piles No. ① and ④ at Bent No. 2 are battered.

WYOMING DEPARTMENT OF TRANSPORTATION
BRIDGE PROGRAM

REVISIONS

SUBSTRUCTURE LAYOUT

BRIDGE OVER NORTH LARAMIE RIVER

STA 104+44

Fletcher Park Road

0800005 PI

REVIEW	DESIGN ✓	Design Section L M Nop
	DETAIL AAA ✓ GGG	Drwg No. 0003 Sheet 5 of 19
APPROVAL	QTY'S ✓	

0800005_1sb2.dgn

Wyo. Proj.	0800005
Sheet	of Sheets

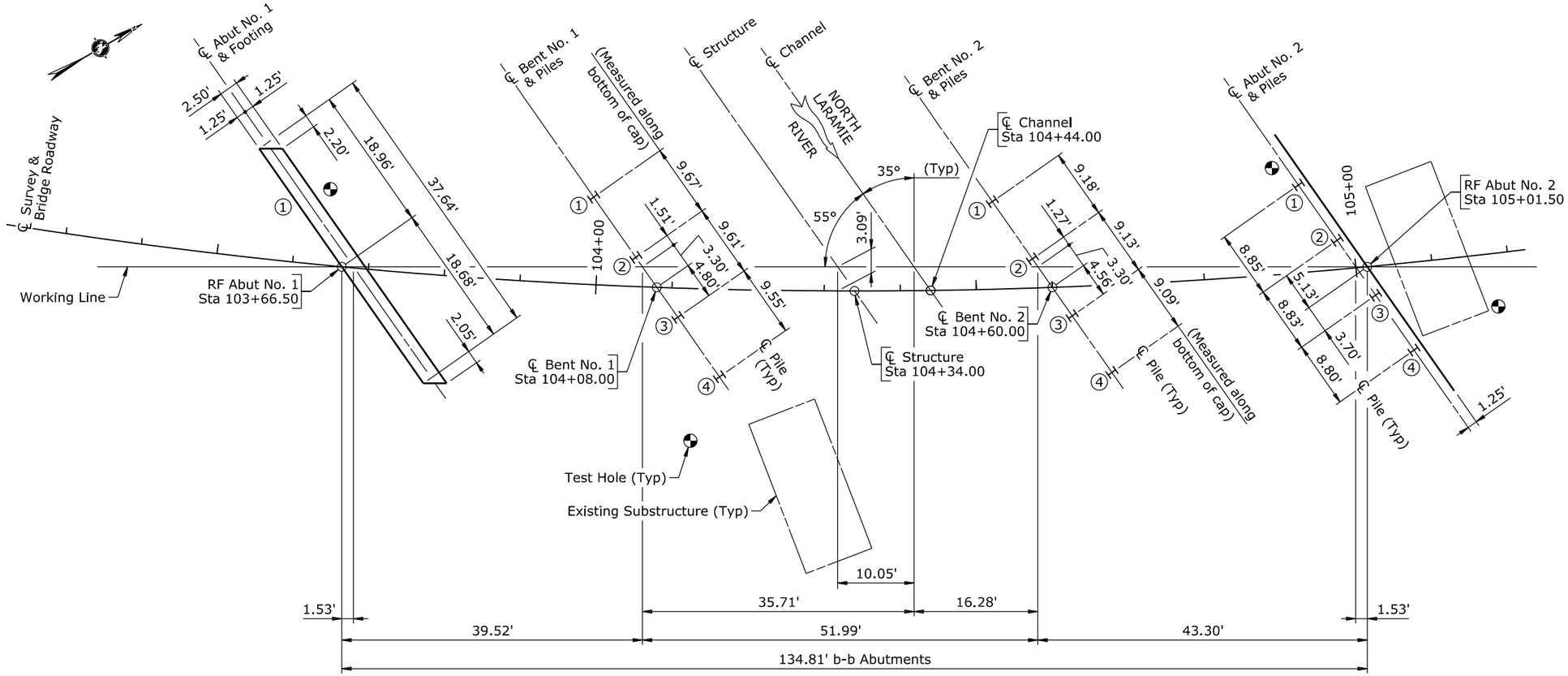

SUBSTRUCTURE LAYOUT

(Longitudinal dimensions are along working line)

SUBSTRUCTURE DATA			
Location	Pile Elevations		Bottom of Footing Elevation
	Piles No. ① - ④		Footing No. ①
	Top	Bottom	
Abut No. 1	——	——	4792.00
Bent No. 1	4791.83	4774.83	——
Bent No. 2	4787.99	4752.99	——
Abut No. 2	4784.62	4760.62	——

Note: 1) Piles at Abutment No. 2 are HP 10 x 42, piles at bents are HP 14 x 73.
2) Piles No. ① and ④ at bents are battered.

WYOMING DEPARTMENT OF TRANSPORTATION
BRIDGE PROGRAM

REVISIONS

FINAL GEOLOGY LAYOUT

BRIDGE OVER NORTH LARAMIE RIVER

STA 104+44

Fletcher Park Road

0800005 PI

REVIEW	DESIGN ✓	Design Section L M Nop
APPROVAL	DETAIL BBB ✓ EEE	Drwg No. Sheet 1 of 1
	QTY'S ✓	

0800005_1fg.dgn

Wyo. Proj.	0800005
Sheet B6 of B21 Sheets	

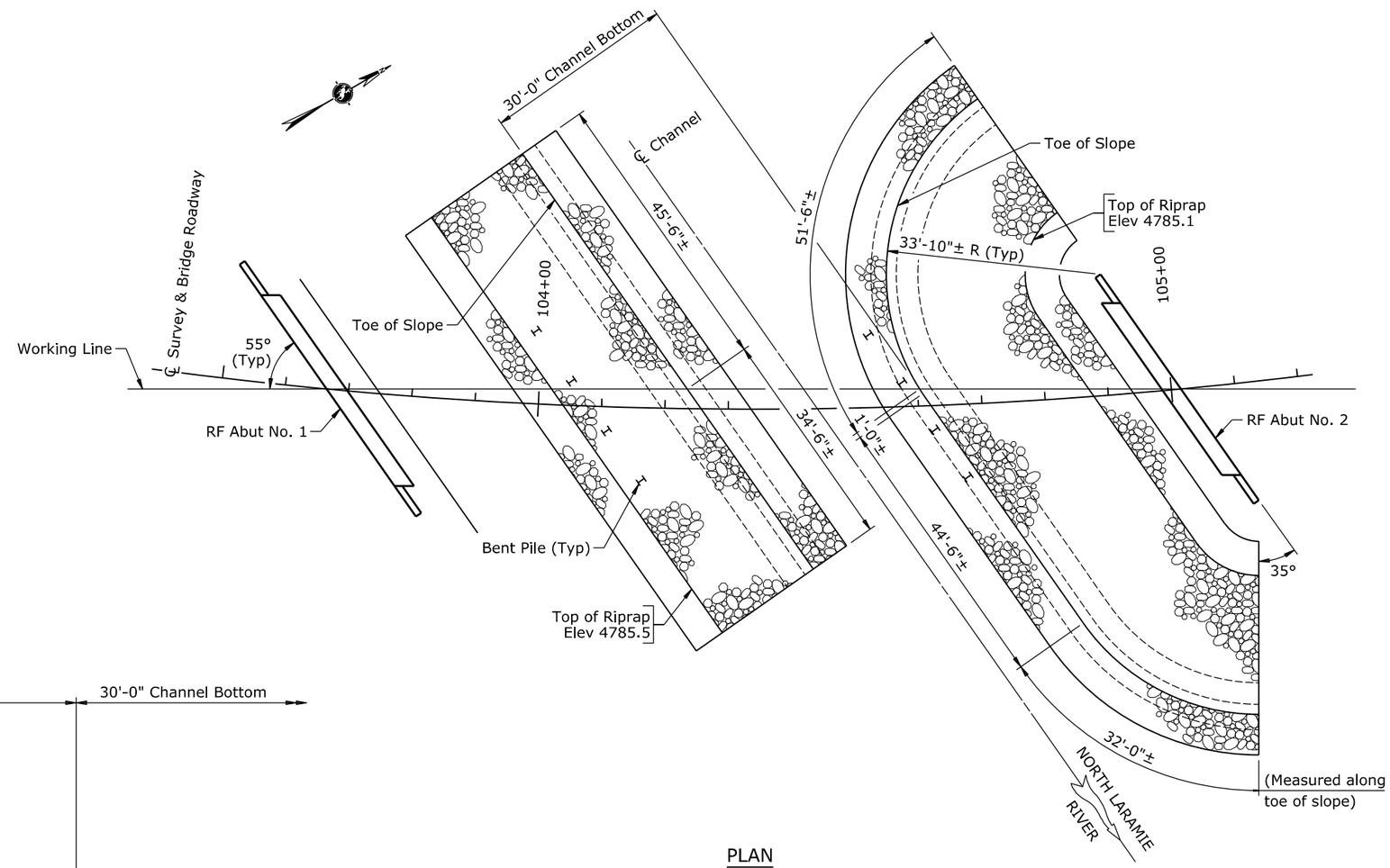

PLAN

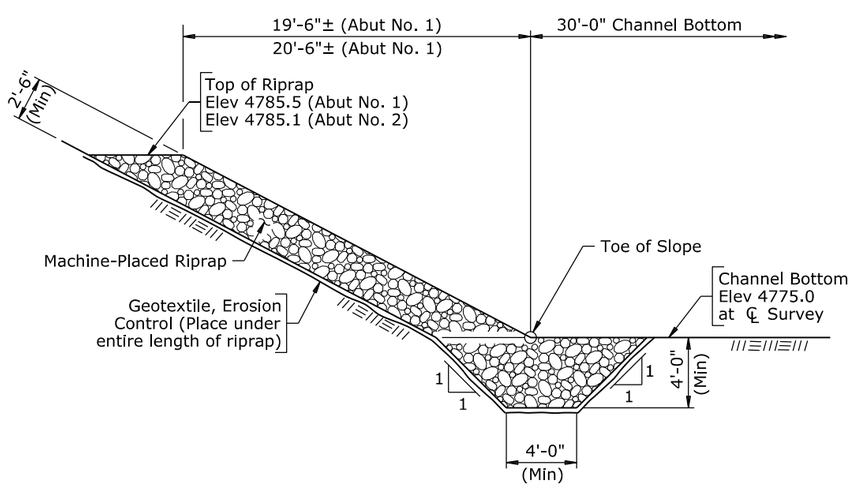

TYPICAL SECTION

WYOMING DEPARTMENT OF TRANSPORTATION
BRIDGE PROGRAM

REVISIONS

RIPRAP DETAILS

BRIDGE OVER NORTH LARAMIE RIVER

STA 104+44

Fletcher Park Road

0800005 PI

REVIEW	DESIGN ✓	Design Section	L M Nop
	DETAIL AAA ✓ GGG		
APPROVAL	QTY'S CCC ✓ AAA	Drwg No. 0003	Sheet 6 of 19

0800005_1rr.dgn

Wyo. Proj.	0800005
Sheet	B7 of B21 Sheets

SUMMARY OF LABORATORY TEST DATA

TEST NO.	LOCATION (station)	ELEVATION	BLOWS Per Ft.	SIEVE ANALYSIS - % PASSING #10	#40	#200	LIQUID LIMIT	PLASTIC INDEX	DENSITY WET PCF	MOIST. % DRY WT.	SPECIFIC GRAVITY	SHEAR STRENGTH - PEAK - lb./ft.²	UNIFIED & AASHTO CLASSIFICATION	UNIT COHESION lb./ft.²	Ø MAXIMUM	% SATURATION	REMARKS
1	103+64, 10' Lt. ℄	4791.1-4790.1	62						128.6	17.1							Sandy Shale
2	103+64, 10' Lt. ℄	4786.1-4785.1	100/9.5"						129.7	15.4							Clayey Sandstone
3	103+64, 10' Lt. ℄	4781.1-4780.4	100/8.5"						128.7	10.5							Clayey Sandstone
4	104+13, 20' Rt. ℄	4780.8-4778.3	S.T.C.	74	37	16.0	37	13	122.2	8.3			SC, A-2-6(0)				Weathered CL. SS.
5	104+13, 20' Rt. ℄	4777.9-4776.9	50						131.2	14.8							Clayey Sandstone
6	104+13, 20' Rt. ℄	4770.1-4769.1	S.T.C.						123.9	9.7							Clayey Sandstone
7	104+13, 20' Rt. ℄	4767.9-4767.1	100/10"						126.6	10.4							Clayey Sandstone
8	104+13, 20' Rt. ℄	4764.6-4763.6	S.T.C.						128.8	8.6							Clayey Sandstone
9	105+18, 7' Rt. ℄	4779.6-4778.6	3	74	53	10.4	NV	NP		8.6			SP-SM, A-2-4(0)				
10	105+18, 7' Rt. ℄	4769.6-4768.6	12	71	40	18.2	34	14	128.9	12.7			SC, A-2-6(1)				
11	105+18, 7' Rt. ℄	4754.3-4753.6	100/8.5"						131.2	12.6							Clayey Sandstone

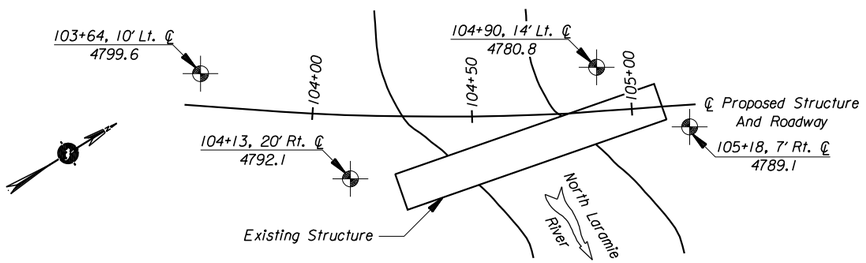

UNIFIED SOIL CLASSIFICATION

GRAVEL
- GW - Well graded gravel
- GP - Poorly graded gravel
- GM - Silty sandy gravel
- GC - Clayey gravel

SAND
- SW - Well graded sand
- SP - Poorly graded sand
- SM - Silty sand
- SC - Clayey sand

SILT & CLAY
- ML - Inorganic silt, slight plasticity
- CL - Inorganic clay, medium plasticity
- OL - Organic silt and silty clay, low plasticity

SILT & CLAY L.L.greater than 50%
- MH - Inorganic elastic silt
- CH - Inorganic clay, high plasticity
- OH - Organic clay, medium to high plasticity

highly Organic soils
- PT - Peat and other highly organic soils

STRENGTH CLASS DEFINITION - BASED ON BLOWS/FT.
— STANDARD PENETRATION —

CONSISTENCY GRANULAR	BLOWS PER FT.	CONSISTENCY COHESIVE	BLOWS PER FT.
Very Loose	0 - 4	Very Soft	0 - 1
Loose	5 - 10	Soft	2 - 4
Medium Dense	11 - 24	Medium Stiff	5 - 8
Dense	25 - 50	Stiff	9 - 15
Very Dense	>51	Very Stiff	16 - 30
		Hard	31 - 60
		Very Hard	>61

GROUND WATER SURFACE

☐ Not Encountered

☒ As Shown, measured - Date (s) 9/9/93

Borings shown made with: Auger Rig ☒ 4001 ☐ Air ____

Rotary Rig ☐ ___ circulation medium ☐ Water ____ ☐ Mud ____

Classification of earth material on this sheet is based upon field inspection and is not to be construed to imply mechanical analysis unless otherwise noted.

The data on this sheet is for design purposes only and is not a warranty of subsurface conditions, except at locations actually drilled. Projections between test holes are based on geologic interpretations and exact elevations cannot be guaranteed.

Data contained on this sheet is based on information from the Geology Program of the Wyoming Transportation Department and is beyond the scope of responsibility of other entities approving or sealing these plans.

Note: 1) CME Automatic SPT Hammer used for soil testing - Efficiency Rating 110%.

2) Test holes projected to ℄ at actual elevations and same stations as drilled.

0000+00 / 0000.0 — LOCATION (station) & TOP HOLE ELEVATION

0000+00 / 0000.0 — LOCATION (station) & TOP HOLE ELEVATION Not Shown When Projected

Ground line

test number / blows per foot: 1 | 35 — STANDARD PENETRATION

test number / size of tube: 2 | Sh. | 3" — SHELBY TUBE SAMPLE

3" | Sh. | 2 — Mirror Image (when test is shown at left of hole)

test number / size of tube: 3 | S.T.C. | 3" — SHELBY TUBE CORE SAMPLE

test number / shear strength (lbs./ft.²): 4 | V.S. | 200 — VANE SHEAR

test number / recovery: 5 | 90% — CORE

Ground Surface

Ground Water Surface, date

abrupt material change

estimated material change

transitional material change

Bedrock Contact

GRAPHIC REPRESENTATION - DRIVEPOINT PENETRATION

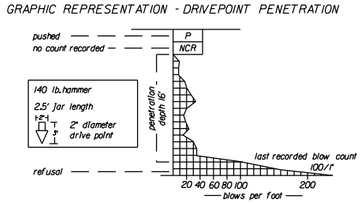

LEGEND OF EARTH MATERIALS

soils	bedrock
LOESS	LIMESTONE
CLAY	SHALE
SILT	CLAYSTONE
SAND	SILTSTONE
GRAVEL	COAL & LIGNITE
fill	SANDSTONE
	CONGLOMERATE
	all Igneous and Metamorphic rocks

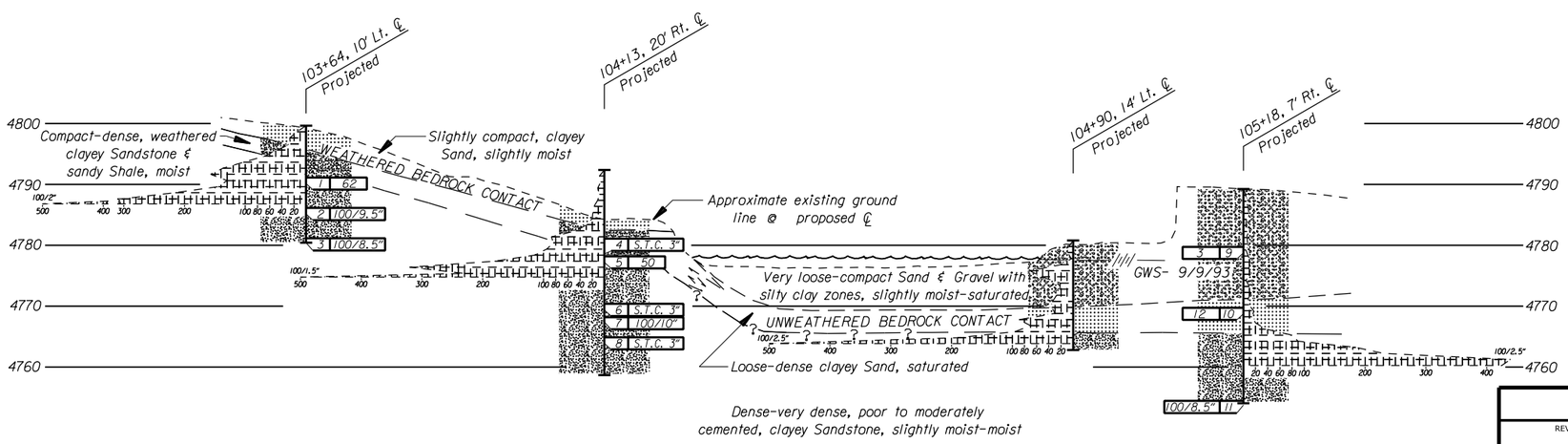

WYOMING DEPARTMENT OF TRANSPORTATION
BRIDGE PROGRAM

REVISIONS

LOG BORING SHEET

BRIDGE OVER NORTH LARAMIE RIVER

STA 104+44

Fletcher Park Road

0800005 Pl

GEOLOGIST B. BOUNDY 0800005 RDK

Design Section L M Nop

Drwg No. 0003 Sheet 7 of 19

APPROVAL

0800005_1lb.dgn

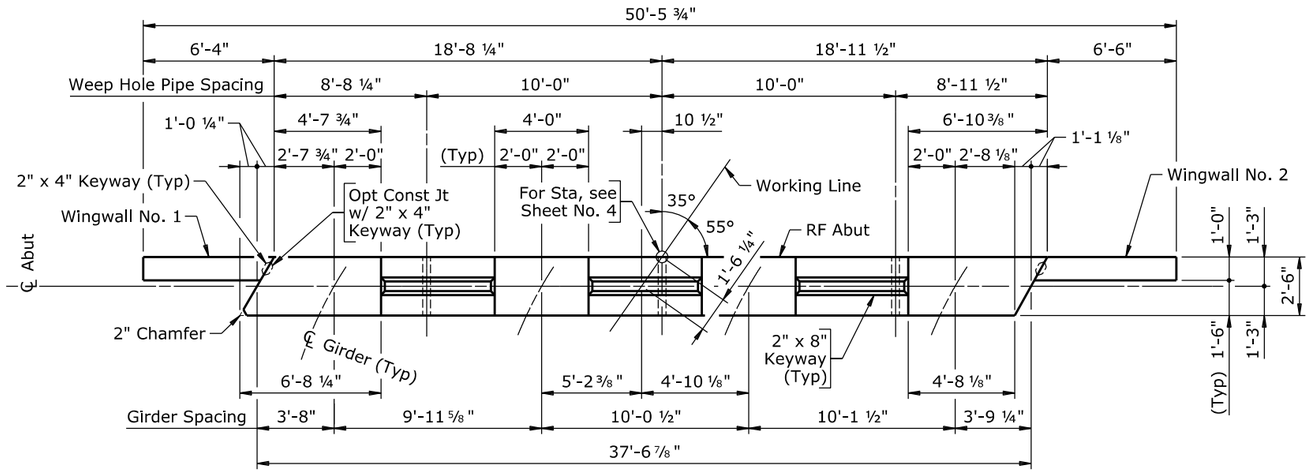

PLAN

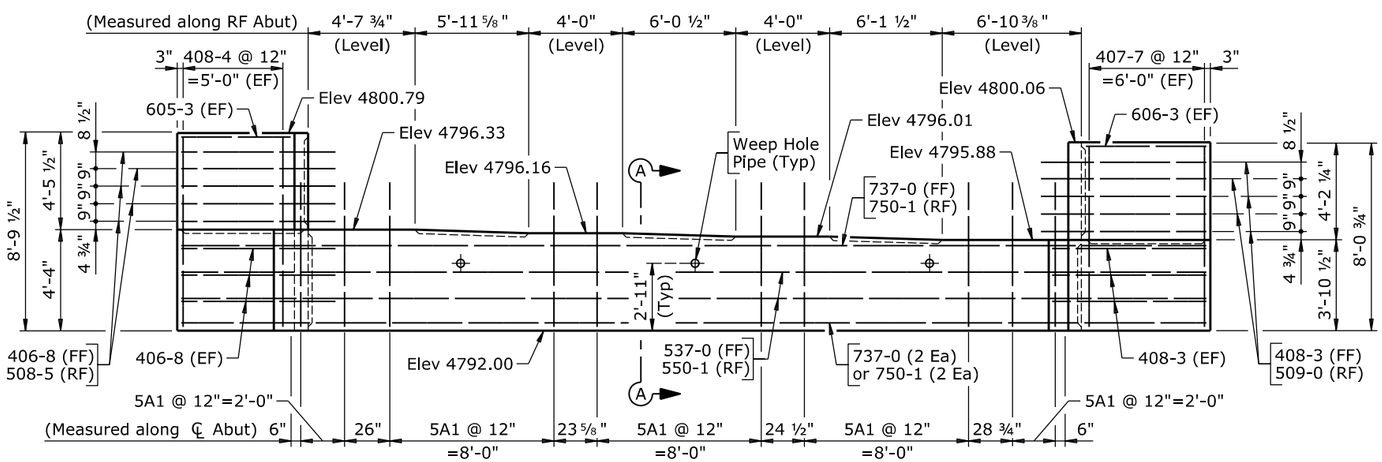

ELEVATION
(Looking back station)

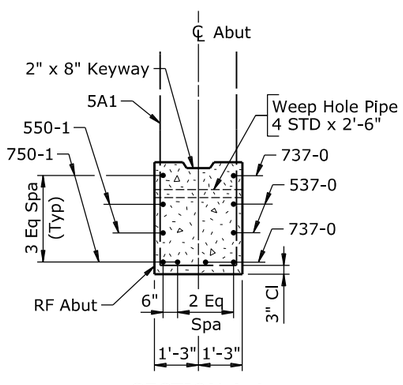

SECTION A-A

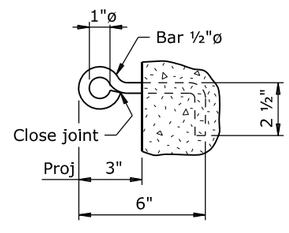

EYEBOLT DETAIL
(8 req'd for securing fence)

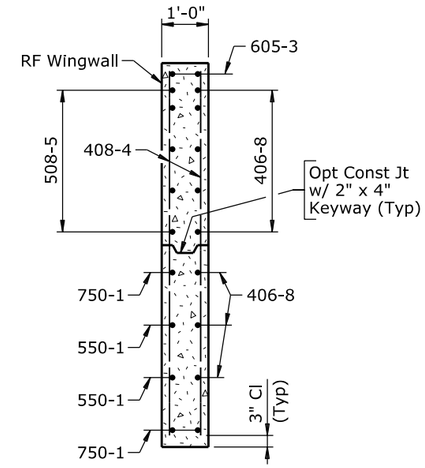

WINGWALL NO. 1 SECTION

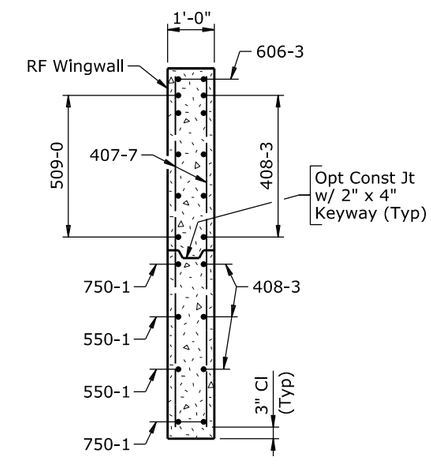

WINGWALL NO. 2 SECTION

Wyo. Proj. 0800005

Sheet B8 of B21 Sheets

BILL OF REINFORCEMENT

Location	Mark	Number Required
Cap	406-8	3
	408-3	3
	5A1	33
	537-0	2
	550-1	2
	737-0	3
	750-1	3
	Weight	1257 LB
Wingwalls	406-8	5
	407-7	14
	408-3	5
	408-4	12
	508-5	5
	509-0	5
	605-3	2
	606-3	2
	Weight	314 LB

Bending Diagram

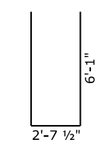

5A1 (Stirrup)
(14'-10")

Note: 1) Ensure the reinforcing steel fabricator prefixes Abutment No. 1 bar marks with numeral 1.
2) Place 5A1 bars parallel with working line.
3) The estimated quantity of class A concrete for Abutment No. 1 is 18.3 CY.

WYOMING DEPARTMENT OF TRANSPORTATION
BRIDGE PROGRAM

REVISIONS

ABUTMENT NO. 1 DETAILS

BRIDGE OVER NORTH LARAMIE RIVER

STA 104+44

Fletcher Park Road

0800005 Pl

REVIEW
APPROVAL

DESIGN GGG ✓ EEE
DETAIL AAA ✓ GGG
QTY'S CCC ✓ AAA

Design Section L M Nop

Drwg No. 0003 Sheet 8 of 19

0800005_1ab1.dgn

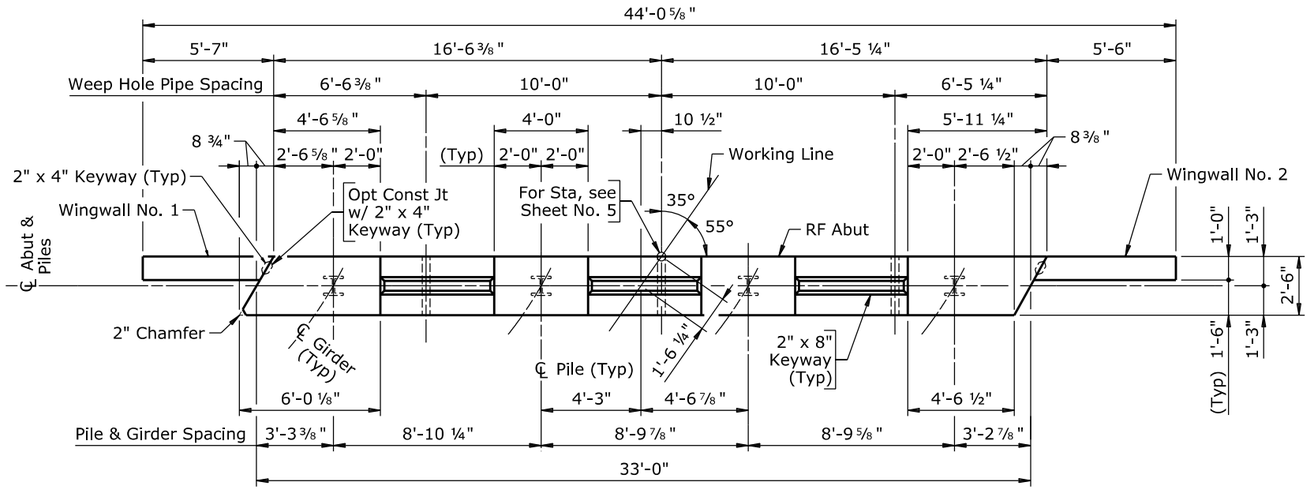

PLAN

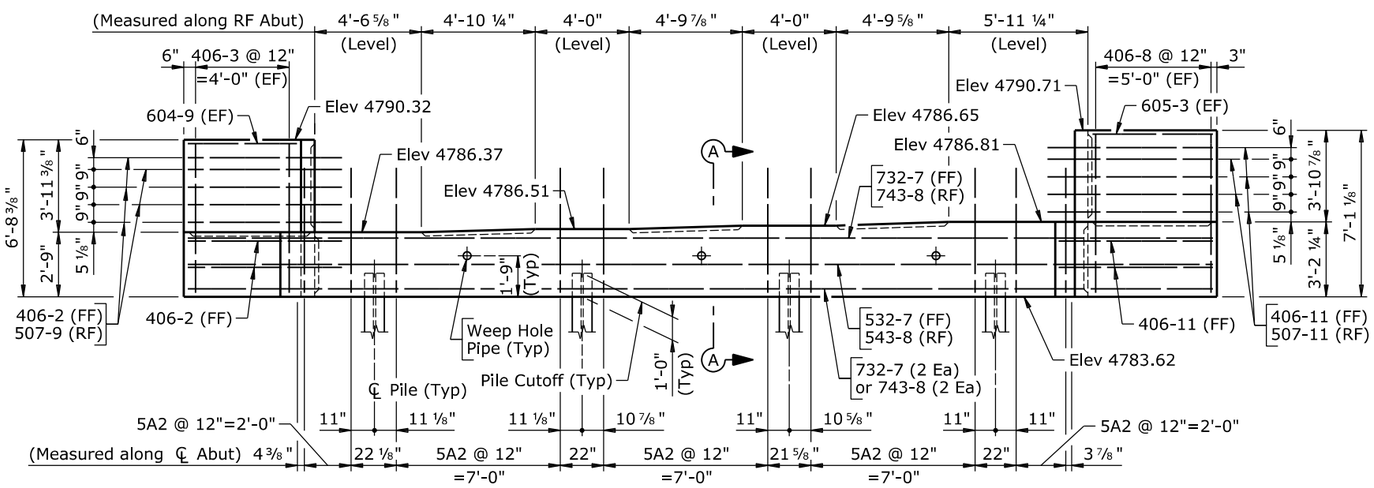

ELEVATION
(Looking ahead station)

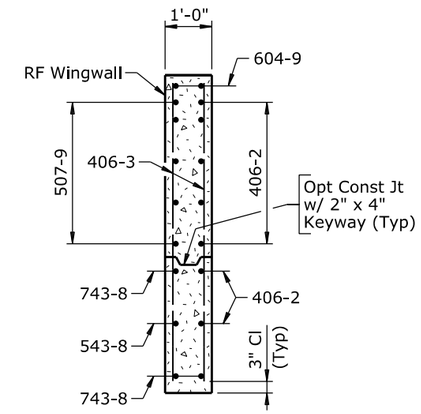

WINGWALL NO. 1 SECTION

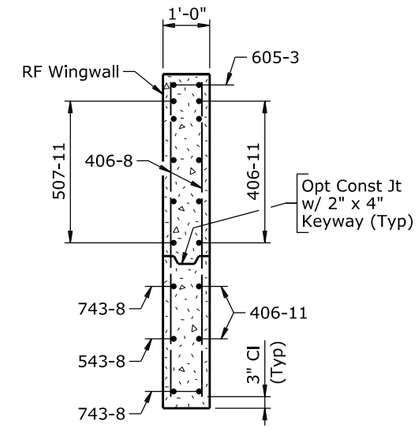

WINGWALL NO. 2 SECTION

BILL OF REINFORCEMENT		
Location	Mark	Number Required
Cap	406-2	2
	406-11	2
	5A2	30
	532-7	1
	543-8	1
	732-7	3
	743-8	3
	Weight	977 LB
Wingwalls	406-2	5
	406-3	10
	406-8	12
	606-11	5
	507-9	5
	507-11	5
	604-9	2
	605-3	2
	Weight	250 LB

Bending Diagram

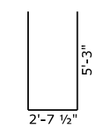

5A2 (Stirrup)
(13'-2")

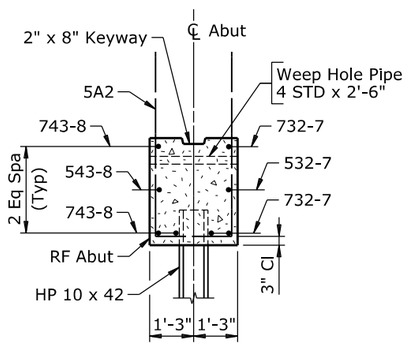

SECTION A-A

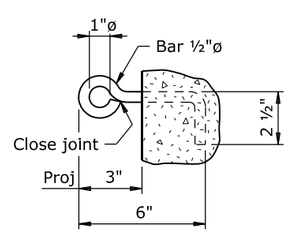

EYEBOLT DETAIL
(8 req'd for securing fence)

Note:
1) Ensure the reinforcing steel fabricator prefixes Abutment No. 2 bar marks with numeral 2.
2) Place 5A2 bars parallel with working line.
3) The estimated quantity of class A concrete for Abutment No. 2 is 11.9 CY.
4) For pile cutoff elevations, see Sheet No. 5.

WYOMING DEPARTMENT OF TRANSPORTATION
BRIDGE PROGRAM

REVISIONS

ABUTMENT NO. 2 DETAILS

BRIDGE OVER NORTH LARAMIE RIVER

STA 104+44

Fletcher Park Road

0800005 Pl

REVIEW	DESIGN GGG ✓ EEE	Design Section	L M Nop
APPROVAL	DETAIL AAA ✓ GGG		
	QTY'S CCC ✓ AAA	Drwg No. 0003	Sheet 9 of 19

0800005_1ab2.dgn

Wyo. Proj.	0800005		
Sheet	B10	of	B21 Sheets

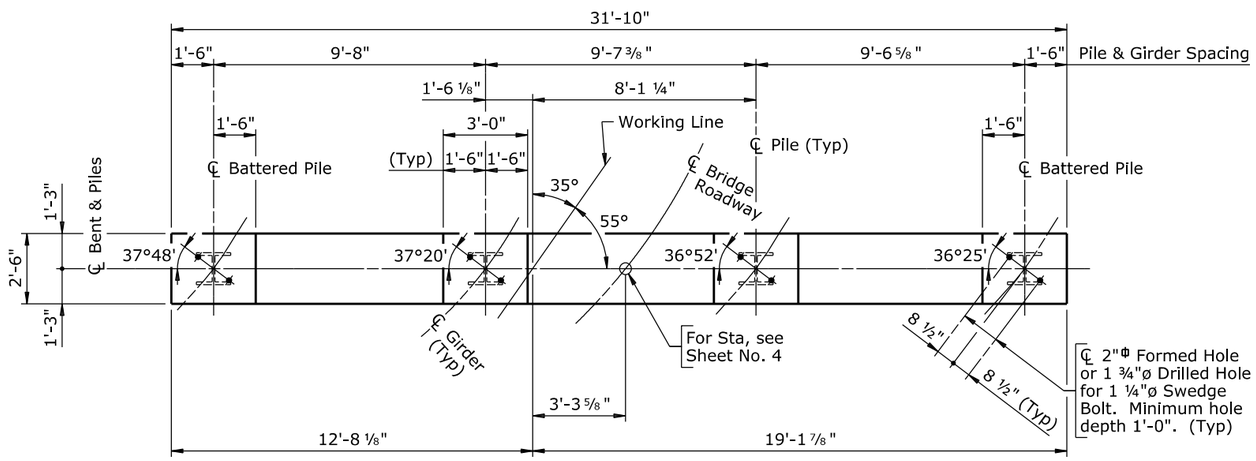

PLAN

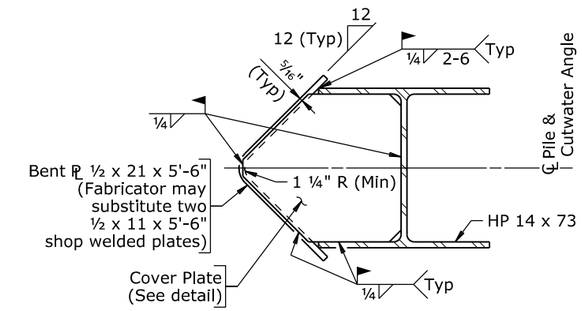

CUTWATER ANGLE DETAIL
(1 req'd)

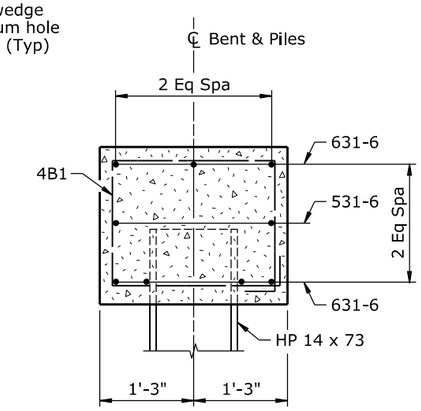

SECTION A-A

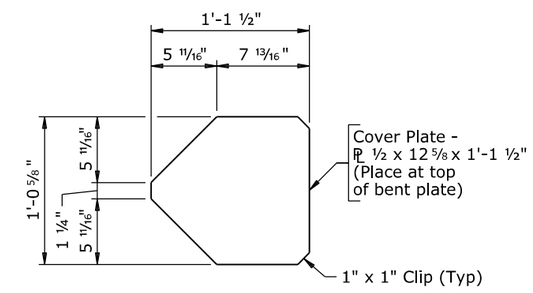

COVER PLATE DETAIL

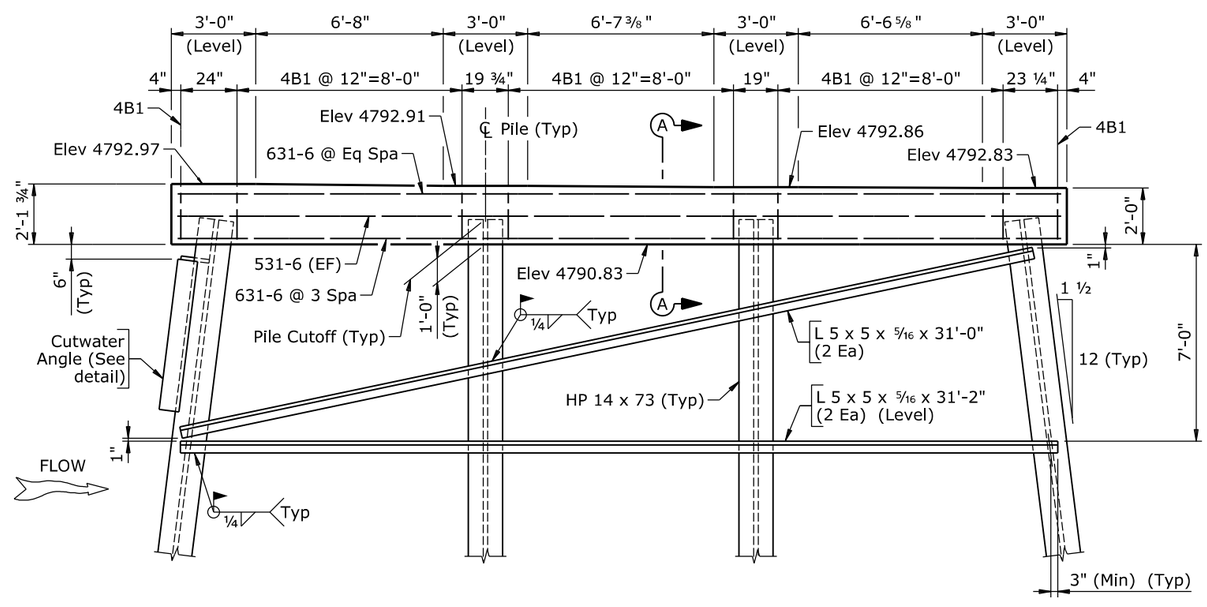

ELEVATION
(Looking ahead station)

BILL OF REINFORCEMENT		
Location	Mark	Number Required
Cap	4B1	29
	531-6	2
	631-6	7
	Weight	560 LB
Bending Diagram		
2'-2" / 1'-8"		
4B1 (Tie) (8'-5")		

Note:
1) Ensure the reinforcing steel fabricator prefixes Bent No. 1 bar marks with numeral 3.
2) Pile spacing is along bottom of cap.
3) The estimated quantity of class A concrete for Bent No. 1 is 6.1 CY.
4) For pile cutoff elevations, see Sheet No. 4.

WYOMING DEPARTMENT OF TRANSPORTATION
BRIDGE PROGRAM

REVISIONS

BENT NO. 1 DETAILS

BRIDGE OVER NORTH LARAMIE RIVER

STA 104+44

Fletcher Park Road

0800005 Pl

REVIEW	DESIGN GGG ✓ EEE	Design Section	L M Nop
	DETAIL AAA ✓ GGG		
APPROVAL	QTY'S CCC ✓ AAA	Drwg No. 0003	Sheet 10 of 19

0800005_1bt1.dgn

Wyo. Proj.	0800005
Sheet	B11 of B21 Sheets

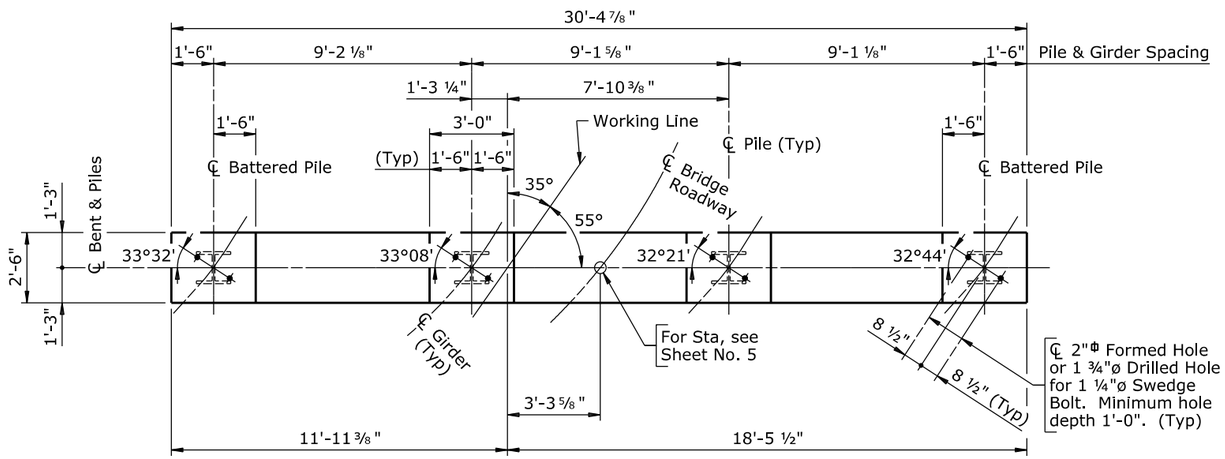

PLAN

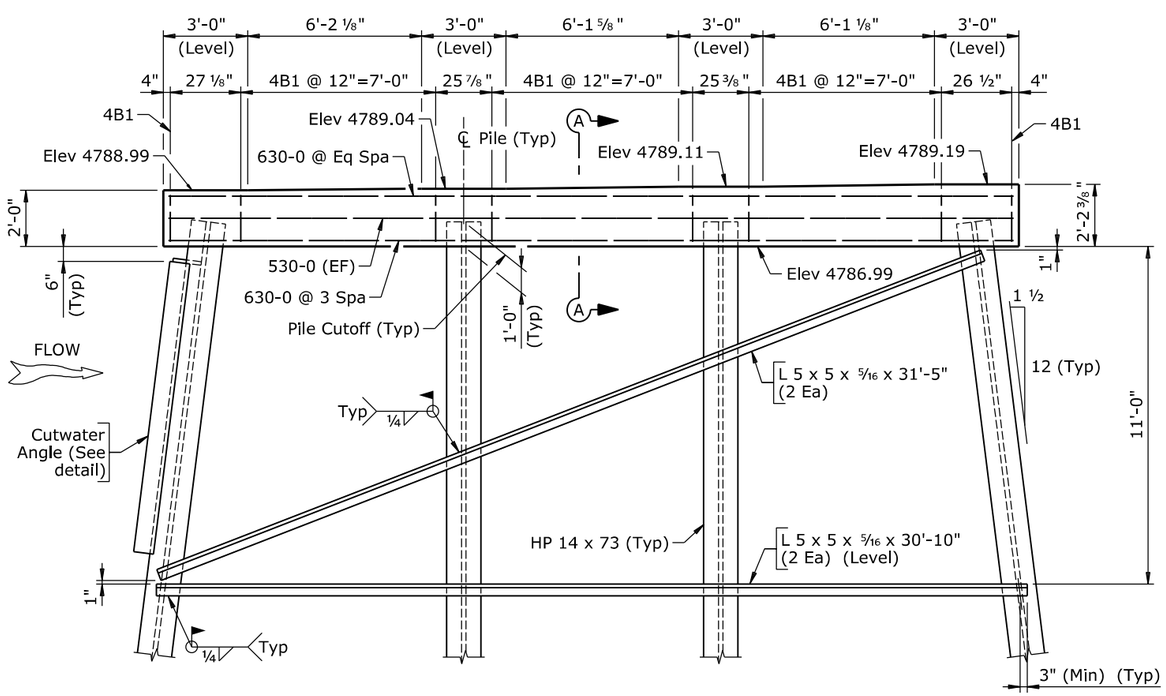

ELEVATION
(Looking ahead station)

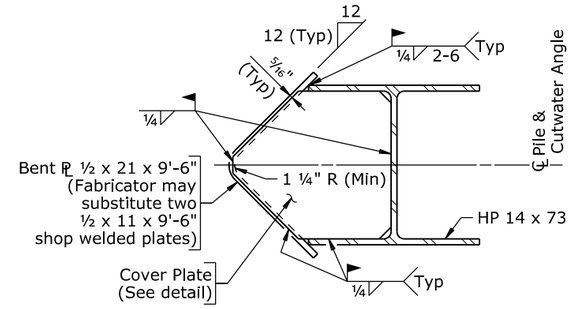

CUTWATER ANGLE DETAIL
(1 req'd)

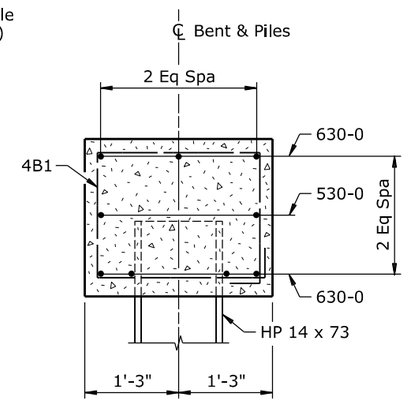

SECTION A-A

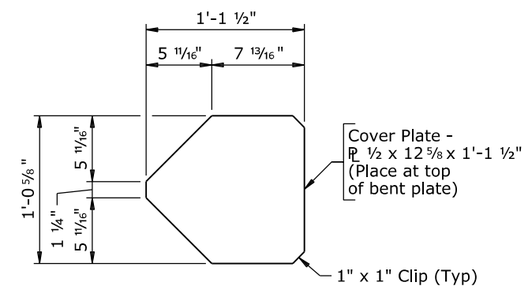

COVER PLATE DETAIL

BILL OF REINFORCEMENT		
Location	Mark	Number Required
Cap	4B1	26
	530-0	2
	630-0	7
	Weight	525 LB
Bending Diagram		
2'-2" / 1'-8"	4B1 (Tie) (8'-5")	

Note:
1) Ensure the reinforcing steel fabricator prefixes Bent No. 2 bar marks with numeral 4.
2) Pile spacing is along bottom of cap.
3) The estimated quantity of class A concrete for Bent No. 2 is 5.9 CY.
4) For pile cutoff elevations, see Sheet No. 5.

WYOMING DEPARTMENT OF TRANSPORTATION
BRIDGE PROGRAM

REVISIONS

BENT NO. 2 DETAILS

BRIDGE OVER NORTH LARAMIE RIVER

STA 104+44

Fletcher Park Road

0800005 Pl

REVIEW	DESIGN GGG ✓ EEE	Design Section	L M Nop
APPROVAL	DETAIL AAA ✓ GGG		
	QTY'S CCC ✓ AAA	Drwg No. 0003	Sheet 11 of 19

0800005_1bt2.dgn

Wyo. Proj.	0800005		
Sheet	B12	of	B21 Sheets

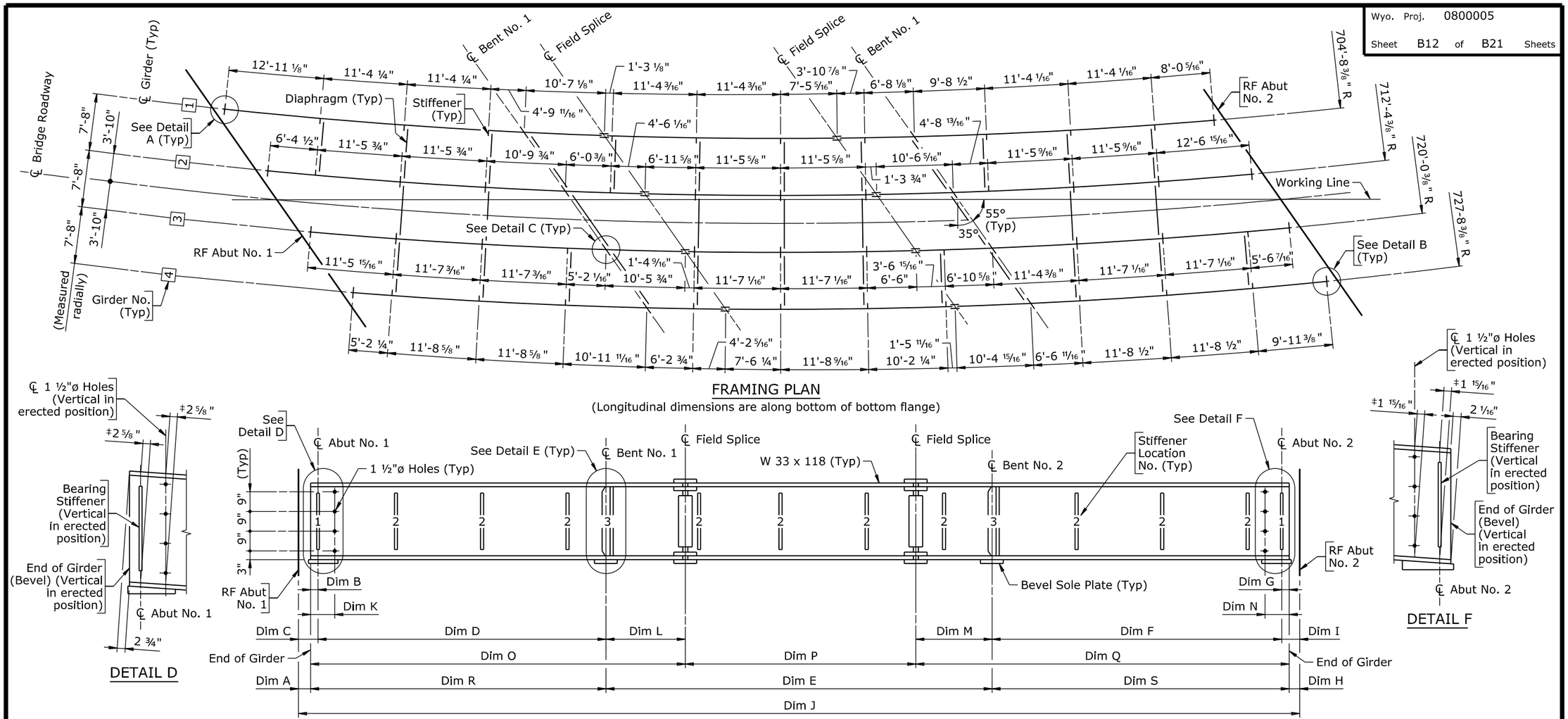

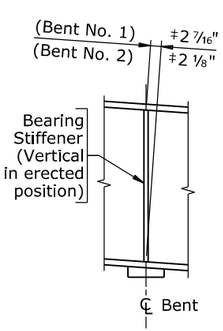

TABLE OF DIMENSIONS

Girder No.	Dimension A	B	C	D	E	F	G	H	I	J	K	L	M
1	1'-3"	4 7/8"	1'-7 7/8"	40'-5 5/16"	52'-6 15/16"	40'-4 15/16"	4"	1'-1 3/8"	1'-5 3/8"	136'-6 7/16"	1'-8 7/8"	10'-7 1/8"	10'-7"
2	1'-2 15/16"	4 13/16"	1'-7 3/4"	40'-1 3/4"	52'-3 3/8"	40'-2 7/8"	4"	1'-1 5/16"	1'-5 5/16"	135'-9 1/16"	1'-8 11/16"	10'-6 7/16"	10'-6 5/16"
3	1'-2 13/16"	4 3/4"	1'-7 9/16"	39'-10 3/8"	52'-0"	40'-0 15/16"	4"	1'-1 1/4"	1'-5 1/4"	135'-0 1/8"	1'-8 1/2"	10'-5 3/4"	10'-5 9/16"
4	1'-2 3/4"	4 11/16"	1'-7 7/16"	39'-7 3/16"	51'-8 3/4"	39'-11 1/16"	4"	1'-1 3/16"	1'-5 3/16"	134'-3 5/8"	1'-8 5/16"	10'-5 1/16"	10'-4 15/16"

Girder No.	Dimension N	O	P	Q	R	S	T	U	V	W	X	Y	Z
1	1'-5 15/16"	51'-5 5/16"	31'-4 13/16"	51'-3 15/16"	40'-10 3/16"	40'-8 15/16"	50'-10 5/16"	31'-3 11/16"	50'-10 1/2"	51'-0 7/16"	31'-4 13/16"	50'-11 15/16"	136'-1 3/4"
2	1'-5 7/8"	51'-1"	31'-2 5/8"	51'-1 3/16"	40'-6 9/16"	40'-6 7/8"	50'-6 3/16"	31'-1 3/8"	50'-7 7/8"	50'-8 3/16"	31'-2 5/8"	50'-9 3/16"	135'-4 1/2"
3	1'-5 13/16"	50'-8 7/8"	31'-0 11/16"	50'-10 1/2"	40'-3 1/8"	40'-4 15/16"	50'-2 3/16"	30'-11 11/16"	50'-5 1/4"	50'-4 1/8"	31'-0 11/16"	50'-6 1/2"	134'-7 15/16"
4	1'-5 3/4"	50'-4 15/16"	30'-10 3/4"	50'-8"	39'-11 7/8"	40'-3 1/16"	49'-10 7/16"	30'-9 13/16"	50'-2 13/16"	50'-0 1/4"	30'-10 3/4"	50'-4"	133'-11 11/16"

Note: 1) Dimensions are along ℄ Girder unless noted.
‡ 2) Indicated dimensions are between inside of flanges.
3) For Details A, B, and C, see Sheet No. 14.

WYOMING DEPARTMENT OF TRANSPORTATION
BRIDGE PROGRAM

REVISIONS

SUPERSTRUCTURE DETAILS

BRIDGE OVER NORTH LARAMIE RIVER

STA 104+44

Fletcher Park Road

0800005 Pl

REVIEW	DESIGN GGG ✓ EEE	Design Section	L M Nop
APPROVAL	DETAIL AAA ✓ GGG		
	QTY'S CCC ✓ AAA	Drwg No. 0003	Sheet 12 of 19

0800005_1ss1.dgn

Wyo. Proj. 0800005

Sheet B13 of B21 Sheets

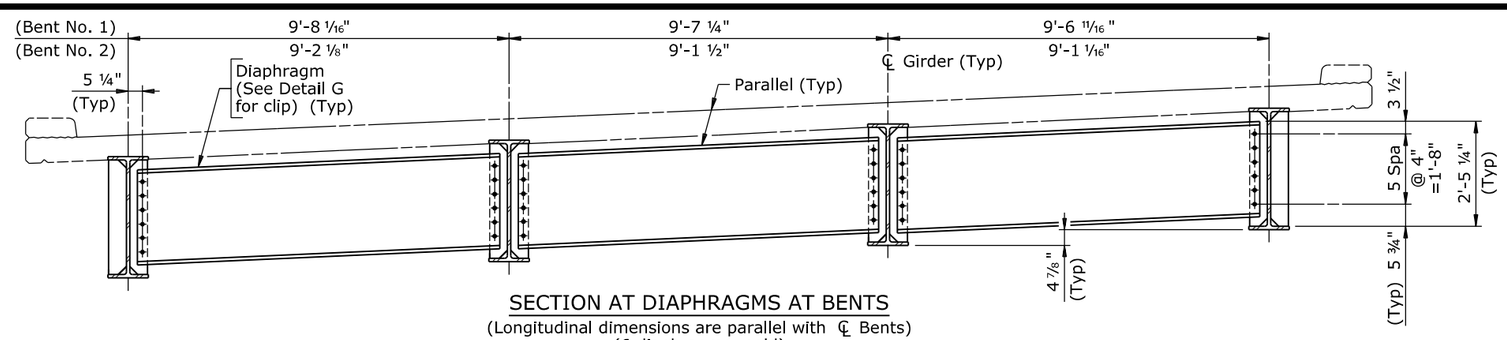

SECTION AT DIAPHRAGMS AT BENTS

(Longitudinal dimensions are parallel with ℄ Bents)
(6 diaphragms req'd)

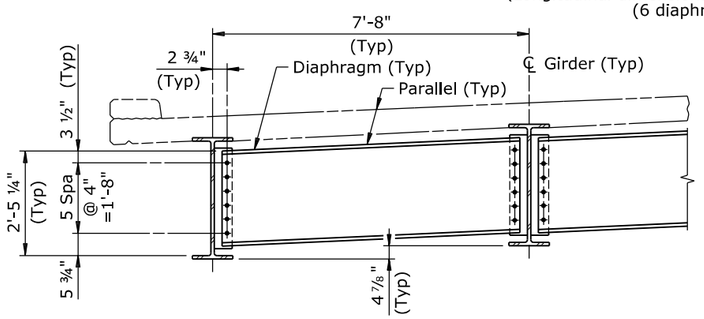

HALF SECTION AT INTERMEDIATE DIAPHRAGMS

(Longitudinal dimensions are radial)
(27 diaphragms req'd)

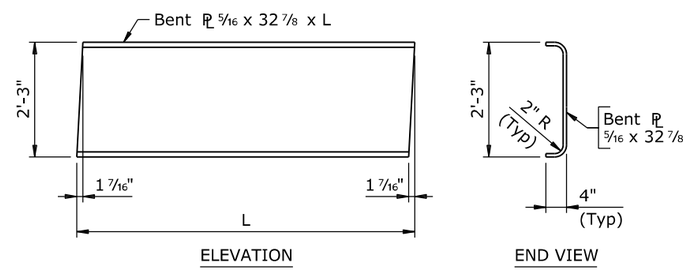

DIAPHRAGM DETAILS

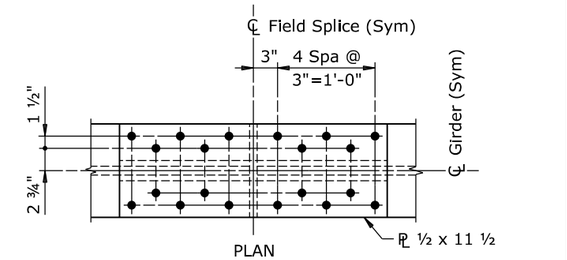

PLAN

(Typical top and bott flanges)

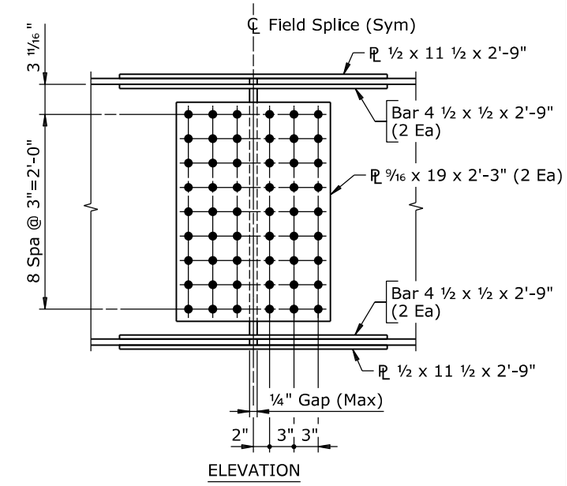

ELEVATION

FIELD SPLICE DETAILS

(8 req'd)

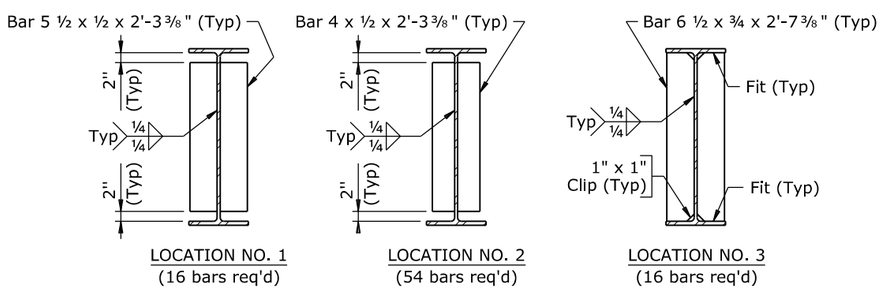

LOCATION NO. 1
(16 bars req'd)

LOCATION NO. 2
(54 bars req'd)

LOCATION NO. 3
(16 bars req'd)

STIFFENER DETAILS

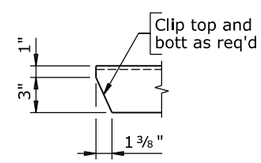

DETAIL G

TABLE OF DIAPHRAGM LENGTHS (L)			
Between Girders No.	Bent No. 1	Bent No. 2	Intermediate Locations
1 & 2	9'-0 15/16"	8'-7"	7'-6 15/16"
2 & 3	9'-0 1/4"	8'-6 7/16"	7'-6 15/16"
3 & 4	8'-11 9/16"	8'-6"	7'-6 15/16"

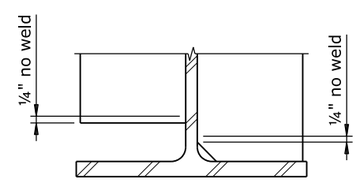

STIFFENER WELD DETAIL

(Typ top & bott)

Note:
1) No camber is required in girders.
2) The distance from center of bolt holes to edges is 1 1/2" unless noted.
3) The use of oversized holes in bent plate to stiffener connections will be permitted, at no additional cost to the department. Ensure oversized holes are in either bent plates or stiffeners. Ensure the fabricator details the proposed connection on the shop drawings.
4) For location of girder numbers and Table of Dimensions, Sheet No. 12.

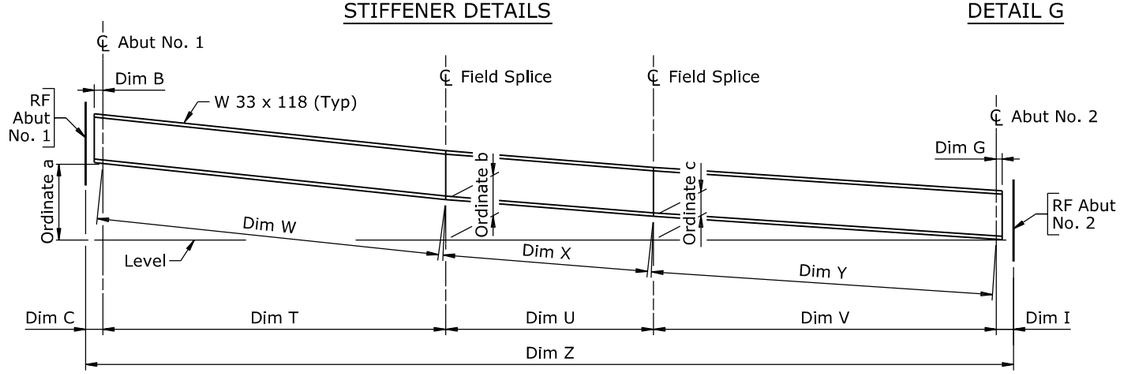

BLOCKING DIAGRAM

TABLE OF BLOCKING ORDINATES			
Girder No.	Ordinate		
	a	b	c
1	10'-1 3/8"	5'-10 1/16"	3'-5 1/2"
2	9'-9 5/8"	5'-7 7/8"	3'-4 3/16"
3	9'-6 1/8"	5'-5 15/16"	3'-3 1/16"
4	9'-2 11/16"	5'-4"	3'-1 15/16"

WYOMING DEPARTMENT OF TRANSPORTATION
BRIDGE PROGRAM

REVISIONS

SUPERSTRUCTURE DETAILS

BRIDGE OVER NORTH LARAMIE RIVER

STA 104+44

Fletcher Park Road

0800005 Pl

REVIEW
APPROVAL

DESIGN GGG ✓ EEE
DETAIL AAA ✓ GGG
QTY'S CCC ✓ AAA

Design Section L M Nop

Drwg No. 0003 Sheet 13 of 19

0800005_1ss2.dgn

Wyo. Proj.	0800005		
Sheet	B14	of	B21 Sheets

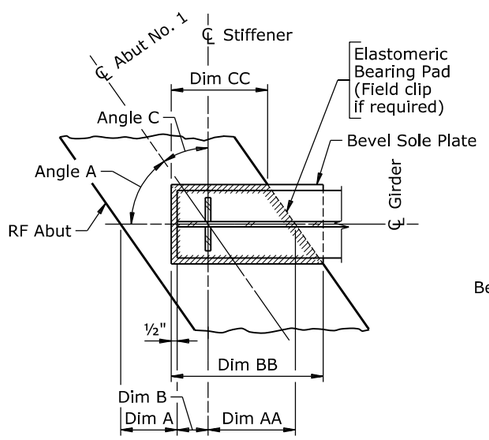

DETAIL A

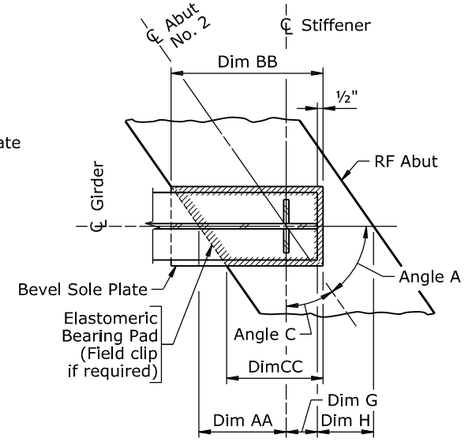

DETAIL B

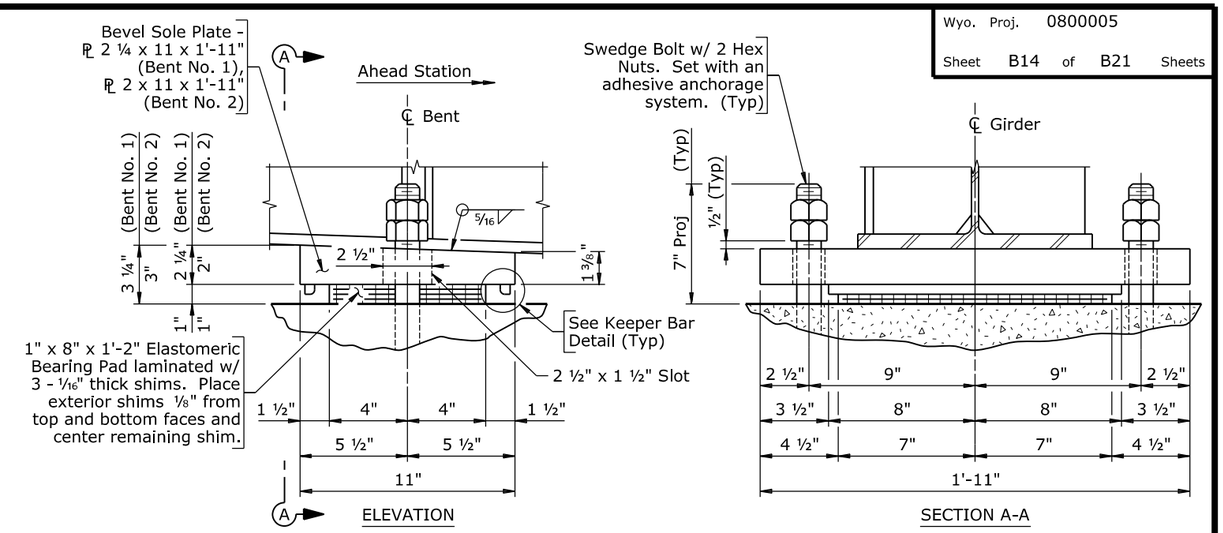

BEARING DETAILS AT BENTS

(4 req'd per bent)

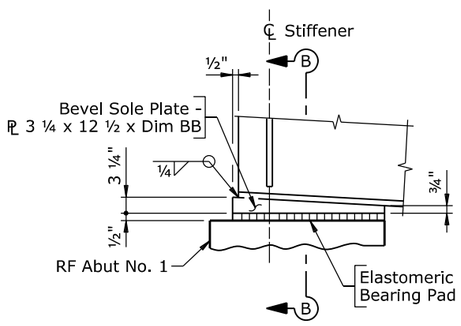

ABUTMENT NO. 1 BEARING DETAIL

(4 req'd)

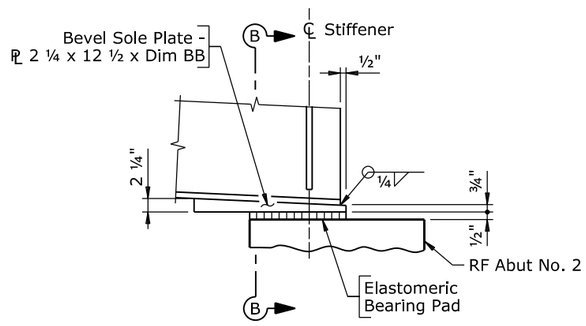

ABUTMENT NO. 2 BEARING DETAIL

(4 req'd)

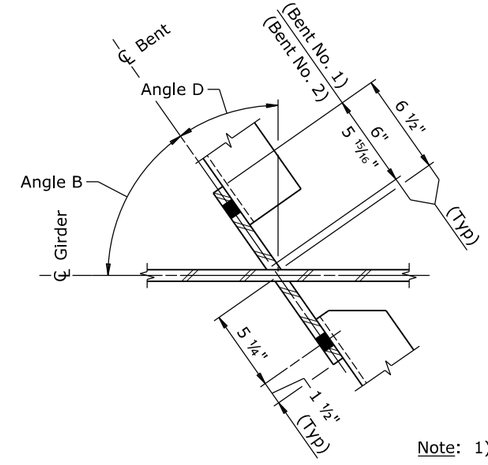

DETAIL C

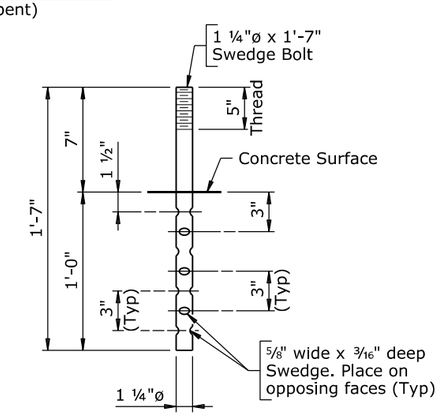

SWEDGE BOLT DETAIL

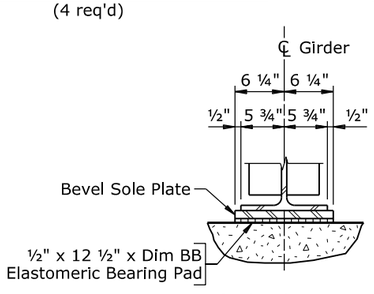

SECTION B-B

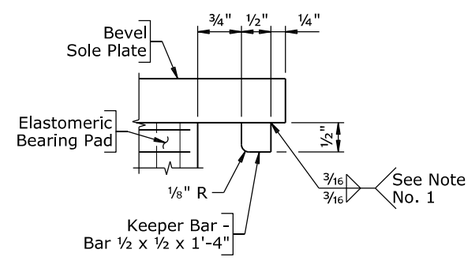

KEEPER BAR DETAIL

Note: 1) Indicated weld is not required to be completed by an AISC certified fabricator. Ensure weld inspection is performed by an AWS Certified Welding Inspector (CWI) qualified and certified in conformance with the provisions of AWS QC1, Specification for AWS Certification of Welding Inspectors. Provide inspection documentation to the engineer.

2) For location of girder numbers and Details A, B, and C, see Sheet No. 12.

TABLE OF DIMENSIONS AND ANGLES

Girder No.	Dim A	Dim B	Dim G	Dim H	Dim AA		Dim BB		Dim CC		Angle A		Angle B		Angle C		Angle D	
					Abut No. 1	Abut No. 2	Abut No. 1	Abut No. 2	Abut No. 1	Abut No. 2	Abut No. 1	Abut No. 2	Bent No. 1	Bent No. 2	Abut No. 1	Abut No. 2	Bent No. 1	Bent No. 2
1	1'-3"	4 7/8"	4"	1'-1 3/8"	1'-7 7/8"	1'-5 3/8"	2'-6 3/4"	2'-1 13/16"	1'-7 7/8"	1'-6 1/4"	48°55'	59°44'	52°12'	56°28'	41°05'	30°16'	37°48'	33°32'
2	1'-2 15/16"	4 13/16"	4"	1'-1 5/16"	1'-7 3/4"	1'-5 5/16"	2'-6 7/16"	2'-1 7/16"	1'-7 3/4"	1'-6 3/16"	49°27'	60°06'	52°40'	56°52'	40°33'	29°54'	37°20'	33°08'
3	1'-2 13/16"	4 3/4"	4"	1'-1 1/4"	1'-7 9/16"	1'-5 1/4"	2'-6 1/8"	2'-1 5/16"	1'-7 5/8"	1'-6 3/16"	49°58'	60°27'	53°08'	57°16'	40°02'	29°33'	36°52'	32°44'
4	1'-2 3/4"	4 11/16"	4"	1'-1 3/16"	1'-7 7/16"	1'-5 3/16"	2'-5 13/16"	2'-1 3/16"	1'-7 1/2"	1'-6 1/8"	50°29'	60°47'	53°35'	57°39'	39°31'	29°13'	36°25'	32°21'

WYOMING DEPARTMENT OF TRANSPORTATION
BRIDGE PROGRAM

REVISIONS

SUPERSTRUCTURE DETAILS

BRIDGE OVER NORTH LARAMIE RIVER

STA 104+44

Fletcher Park Road

0800005 PI

REVIEW	DESIGN GGG ✓ EEE	Design Section	L M Nop
	DETAIL AAA ✓ GGG		
APPROVAL	QTY'S CCC ✓ AAA	Drwg No. 0003	Sheet 14 of 19

0800005_1ss3.dgn

Wyo. Proj.	0800005		
Sheet	B15	of	B21 Sheets

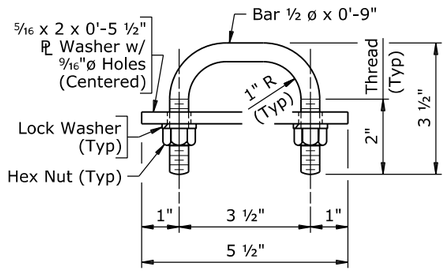

RAIL BOLT DETAIL

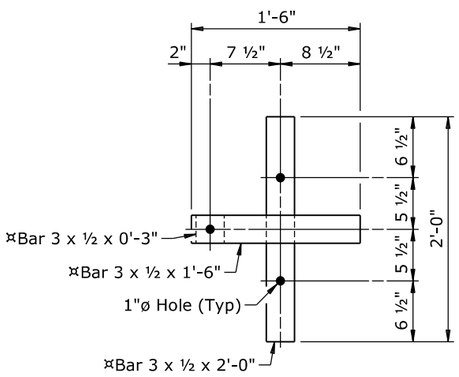

SECTION B-B
(¤Not galvanized)
(Anchor bolts and slab not shown)

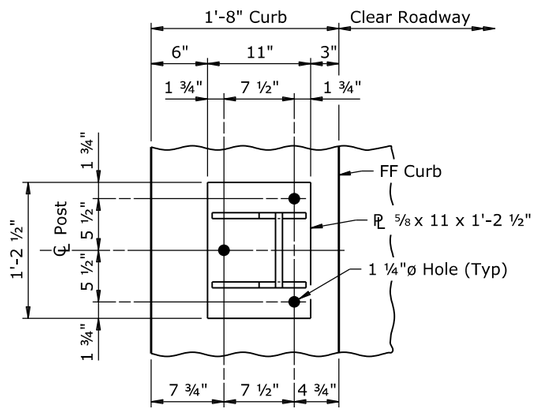

VIEW A-A
(Anchor bolts, rails, and rail bolts not shown)

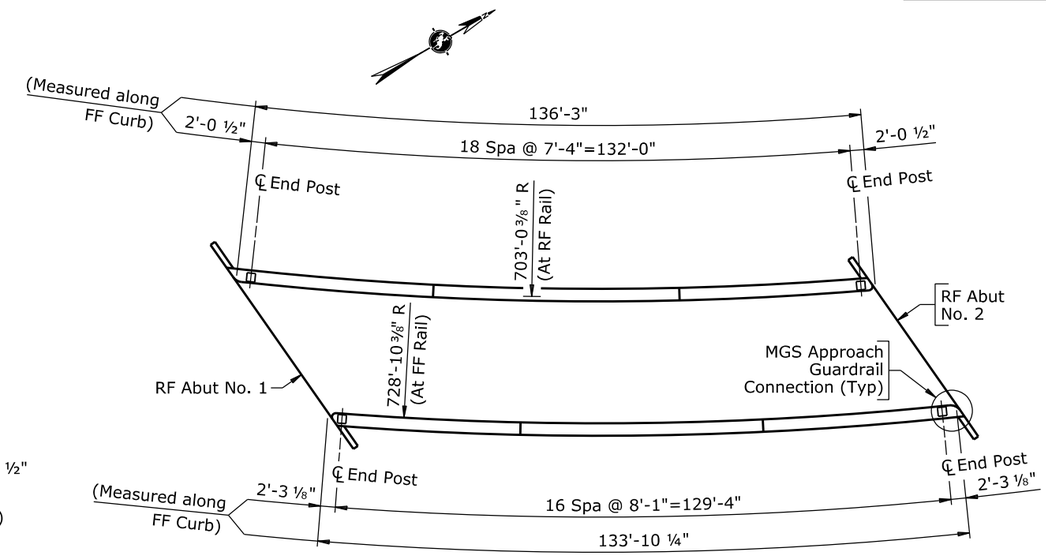

PLAN
(36 posts req'd)
(Longitudinal dimensions are along finished grade)

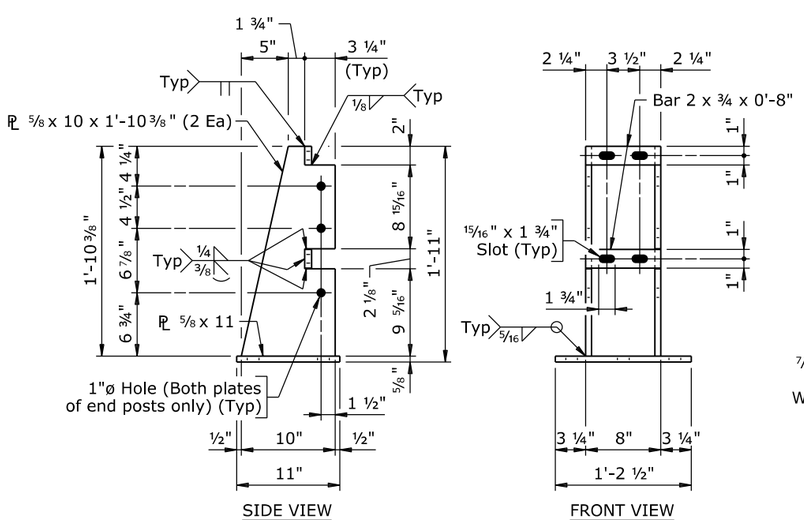

POST DETAILS
(See View A-A for anchor bolt hole spacing)

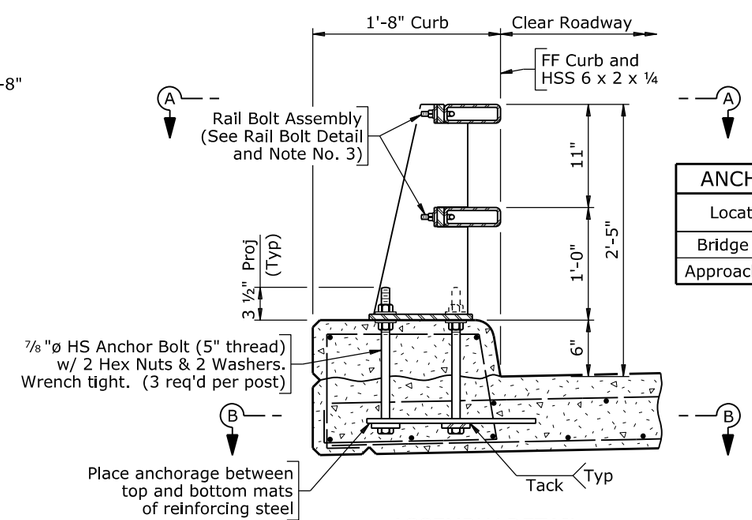

ASSEMBLY DETAIL
(Shown near ℄ Post)
(Bridge slab shown, approach slab similar)

ANCHOR BOLT TABLE	
Location	Anchor Bolt
Bridge Slab	7/8"ø x 1'-3"
Approach Slab	7/8"ø x 1'-5"

Note:
1) Ensure the expansion splice is located in the railing panel which passes over the bridge expansion joint as indicated on the plan.
2) Anchor bolts may be tack welded to anchorage (Shop or field).
3) At post locations, drill two 1 1/16"ø holes in each rail to receive rail bolts (Shop or field). See Post Details for hole spacing.
4) Paint surfaces of the railing components that have been cut, drilled, or otherwise damaged with two coats of zinc-rich paint conforming to ASTM A 780.
5) After installing rails, paint exposed bolt threads with two coats of zinc-rich paint conforming to ASTM A 780.

WYOMING DEPARTMENT OF TRANSPORTATION
BRIDGE PROGRAM

REVISIONS

BRIDGE RAILING DETAILS

BRIDGE OVER NORTH LARAMIE RIVER

STA 104+44

Fletcher Park Road

0800005 PI

REVIEW	DESIGN ✓	Design Section	L M Nop
	DETAIL CCC ✓ AAA		
APPROVAL	QTY'S CCC ✓ AAA	Drwg No. 0003	Sheet 15 of 19

Standard Sheet Dated 9-3-13
Revised 4-3-17

0800005_1br1.dgn

Wyo. Proj.	0800005
Sheet	B16 of B21 Sheets

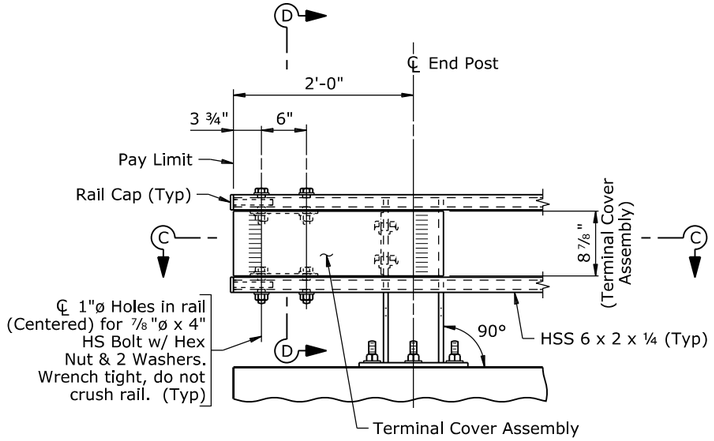

ELEVATION AT TERMINAL

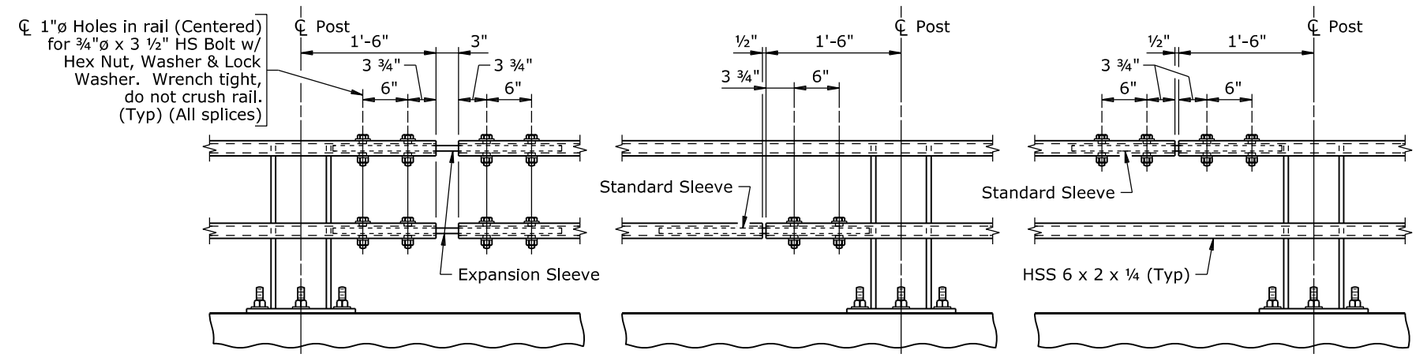

EXPANSION SPLICE
(Top and bottom rail)

STANDARD SPLICE
(Top or bottom rail)

DOUBLE-BOLTED SPLICE
(Top or bottom rail)

SPLICE DETAILS

TERMINAL COMPONENT REQUIREMENTS		
Approach Guardrail Connection	Rail Caps Required	Terminal Cover Assembly Required
MGS Approach Guardrail	Yes (Without bolts)	‡No
Box Beam w/ Rubrail Approach Guardrail	No	No
No Approach Guardrail	Yes (With bolts)	Yes

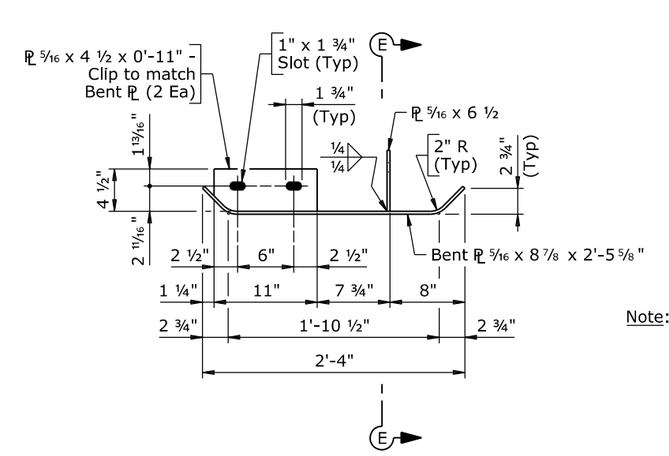

TERMINAL COVER ASSEMBLY DETAIL

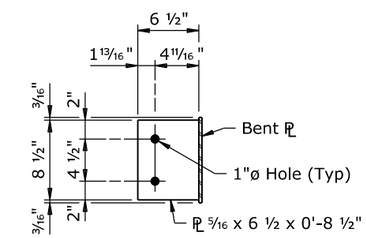

SECTION E-E

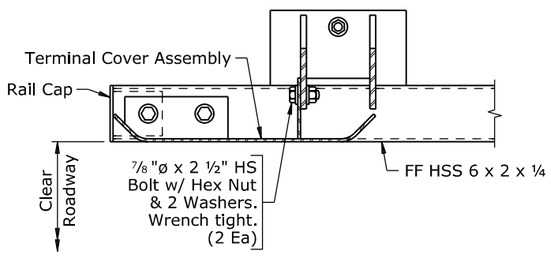

SECTION C-C

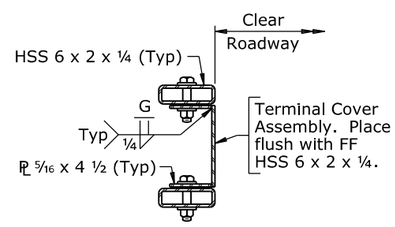

SECTION D-D

Note:
1) Ensure each rail length is continuous over a minimum of two posts.
2) In rehabilitation work, ensure railing that cannot feasibly be made continuous over a minimum of two posts has a double-bolted splice.
3) Splices may be located on either side of post.
4) Not more than one splice is permitted per side of post, except at expansion splices.
5) Slots may be omitted in standard sleeves where bolts are required on one side of splice only.
6) Do not shop splice rails.
7) Terminal components removed during rehabilitation work will remain the property of the department.
‡8) Installation of MGS approach guardrail will require other fabricated assemblies to be connected to end post. See road plans for details and pay item.

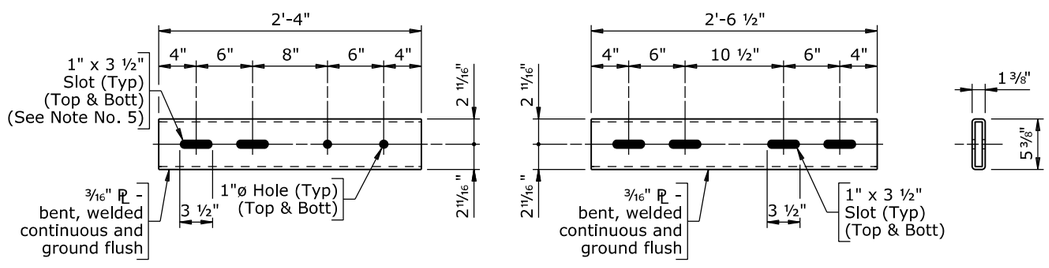

STANDARD SLEEVE

EXPANSION SLEEVE

END VIEW

SLEEVE DETAILS

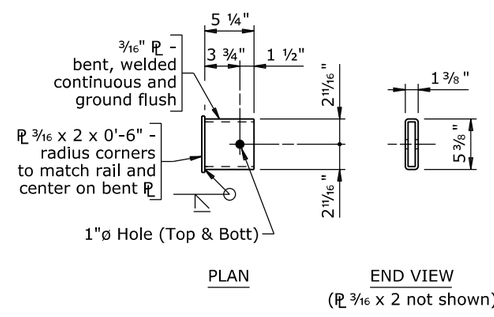

PLAN

END VIEW
(℞ 3/16 x 2 not shown)

RAIL CAP DETAILS

WYOMING DEPARTMENT OF TRANSPORTATION
BRIDGE PROGRAM

REVISIONS

BRIDGE RAILING DETAILS

BRIDGE OVER NORTH LARAMIE RIVER

STA 104+44

Fletcher Park Road

0800005 PI

REVIEW	DESIGN ✓	Design Section	L M Nop
	DETAIL CCC ✓ AAA		
APPROVAL	QTY'S CCC ✓ AAA	Drwg No. 0003	Sheet 16 of 19

Standard Sheet Dated 9-3-13
Revised 6-16-14

0800005_1br2.dgn

Wyo. Proj. 0800005

Sheet B17 of B21 Sheets

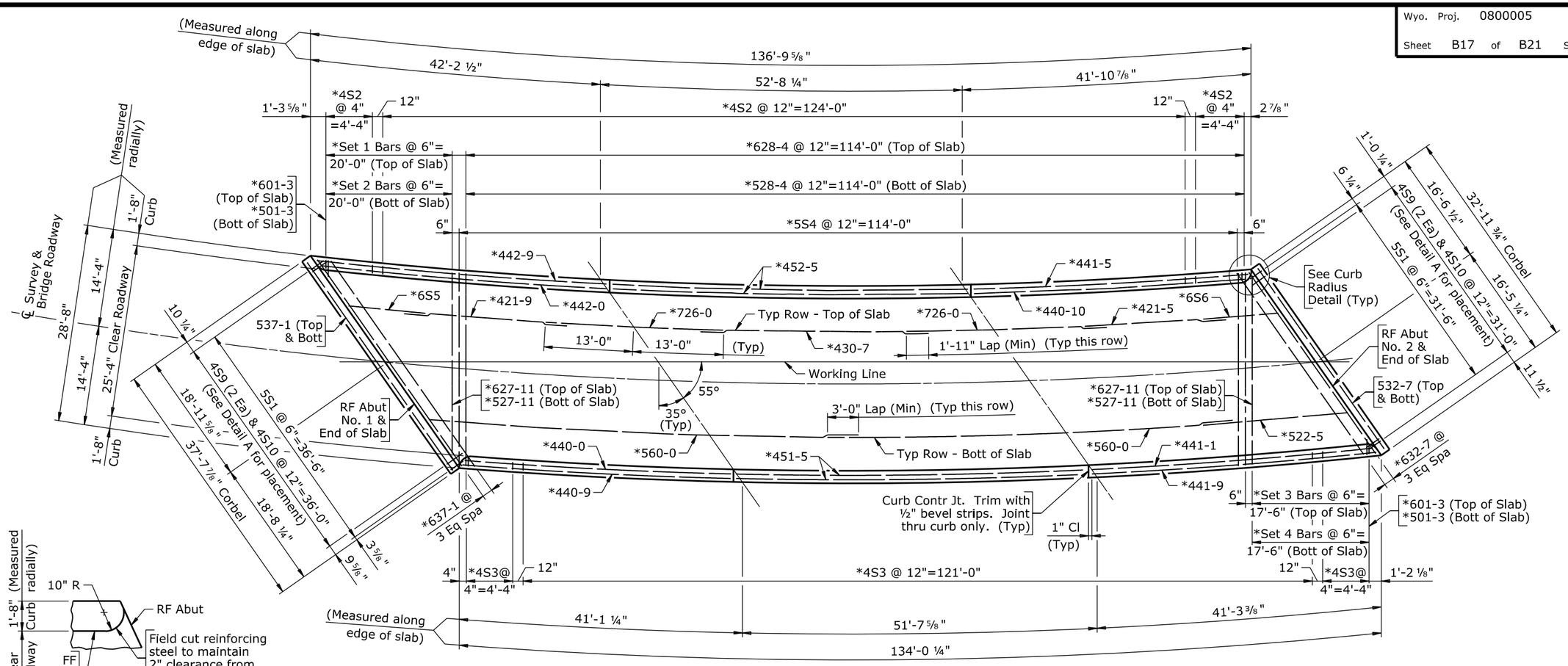

PLAN

(Longitudinal dimensions are along finished grade and parallel with working line unless noted)
(Corbel dimensions include slope and grade)

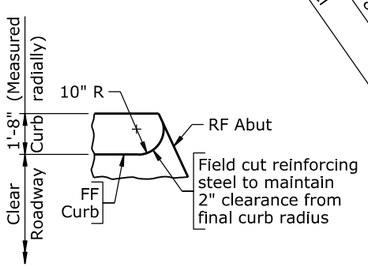

CURB RADIUS DETAIL

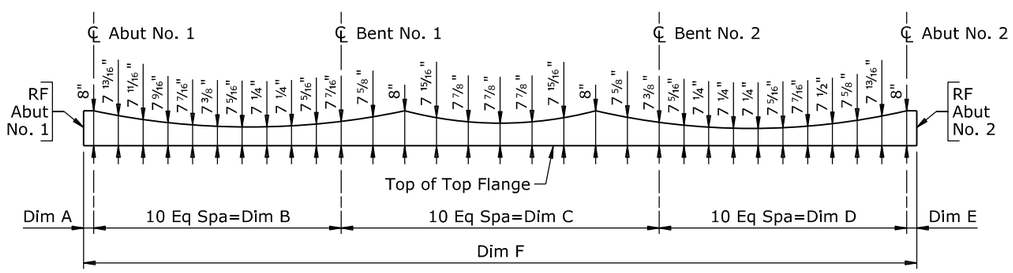

SLAB THICKNESS DIAGRAM

(Dimensions are along ℄ Girder)
(Longitudinal dimensions are along finished grade)
(Includes correction for dead load deflection)

Note:
1) Place transverse reinforcing steel perpendicular to working line unless otherwise shown.
2) Place concrete in slab in one continuous operation at the minimum rate of 17 feet per hour.
3) For Bridge Railing Details, see Sheets No. 15 and 16.
4) For location of girder numbers, see Sheet No. 18.
5) For Detail A, see Sheet No. 19.

TABLE OF DIMENSIONS

Girder No.	Dimension A	B	C	D	E	F
1	1'-7 7/8"	40'-5 3/8"	52'-7"	40'-5"	1'-5 3/8"	136'-6 5/8"
2	1'-7 3/4"	40'-1 3/4"	52'-3 3/8"	40'-2 7/8"	1'-5 1/4"	136'-9"
3	1'-7 5/8"	39'-10 5/8"	52'-0"	40'-0 7/8"	1'-5 1/4"	135'-0 3/8"
4	1'-7 1/2"	39'-7 1/8"	51'-8 3/4"	39'-11"	1'-5 1/8"	134'-3 1/2"

WYOMING DEPARTMENT OF TRANSPORTATION
BRIDGE PROGRAM

REVISIONS

SLAB DETAILS

BRIDGE OVER NORTH LARAMIE RIVER

STA 104+44

Fletcher Park Road

0800005 Pl

REVIEW _____ DESIGN GGG ✓ EEE
DETAIL AAA ✓ GGG
APPROVAL _____ QTY'S CCC ✓ AAA

Design Section L M Nop

Drwg No. 0003 Sheet 17 of 19

0800005_1sl1.dgn

Wyo. Proj.	0800005
Sheet	B18 of B21 Sheets

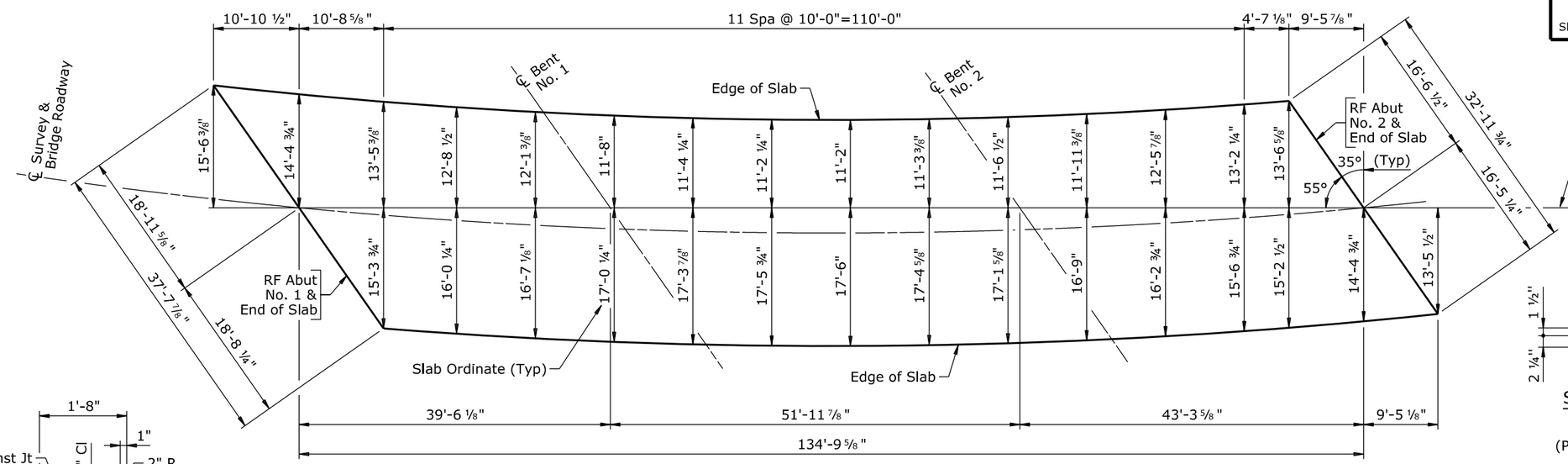

SLAB LAYOUT

(Longitudinal dimensions are parallel with working line and do not include grade)
(Slab ordinates are perpendicular to working line and do not include slope)
(End of slab dimensions do not include slope and grade)

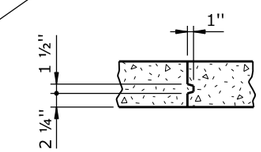

SLAB CONSTRUCTION JOINT DETAIL

(Place parallel with transverse reinforcing steel)
(For emergency use only)

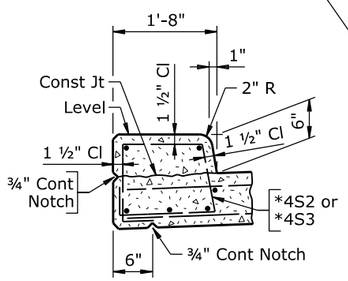

CURB DETAIL

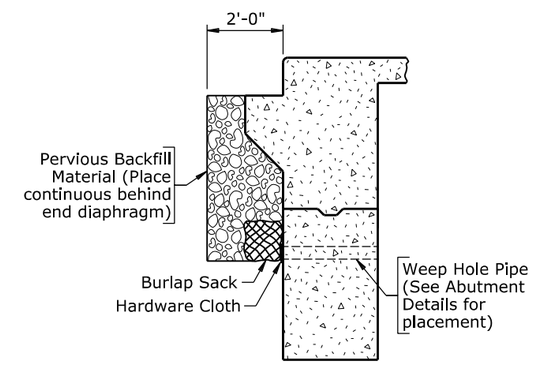

WEEP HOLE ASSEMBLY DETAIL

Note:
1) Each weep hole assembly consists of a pipe 4 STD through abutment cap, one 6" x 6" piece of aluminum or galvanized steel wire 4 mesh hardware cloth (Minimum wire diameter 0.03") centered over pipe end and firmly anchored to rear face abutment, and one cubic foot of coarse aggregate in a securely tied burlap sack.
2) For Abutment Details, see Sheets No. 8 & 9.
3) For Slab Thickness Diagram, see Sheet No. 17.

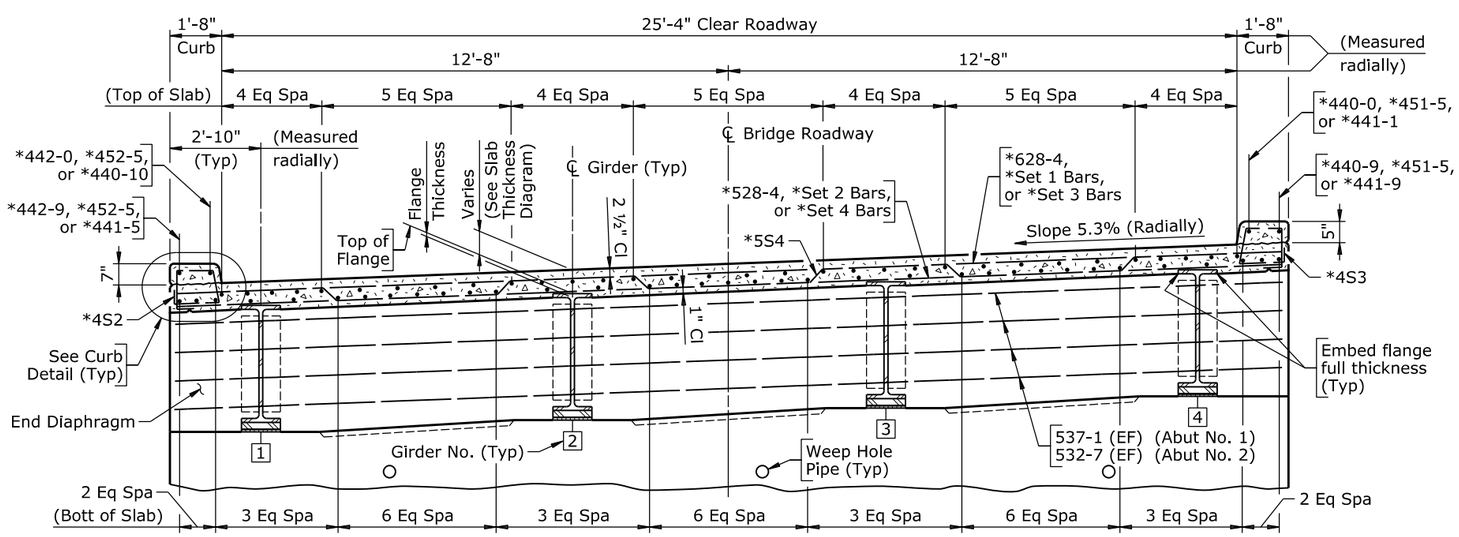

TYPICAL SECTION

(Looking ahead station)

WYOMING DEPARTMENT OF TRANSPORTATION
BRIDGE PROGRAM

REVISIONS

SLAB DETAILS

BRIDGE OVER NORTH LARAMIE RIVER

STA 104+44

Fletcher Park Road

0800005 Pl

REVIEW	DESIGN GGG ✓ EEE	Design Section	L M Nop
	DETAIL AAA ✓ GGG		
APPROVAL	QTY'S CCC ✓ AAA	Drwg No. 0003	Sheet 18 of 19

0800005_1sl2.dgn

Wyo. Proj.	0800005
Sheet	B19 of B21 Sheets

TABLE OF SCREED ELEVATIONS

Add base elevation 4700.00 to all elevations listed in table. Elevations include grade, slope, and correction for dead load deflection.
For screed line locations, see Sheet No. 3.

Screed Line No.	Tenth Point of Spans																														
	1.0 ℄ Abut No. 1	1.1	1.2	1.3	1.4	1.5	1.6	1.7	1.8	1.9	2.0 ℄ Bent No. 1	2.1	2.2	2.3	2.4	2.5	2.6	2.7	2.8	2.9	3.0 ℄ Bent No. 2	3.1	3.2	3.3	3.4	3.5	3.6	3.7	3.8	3.9	4.0 ℄ Abut No. 2
①	100.07	99.71	99.36	99.00	98.65	98.30	97.95	97.60	97.26	96.92	96.59	96.16	95.74	95.33	94.92	94.52	94.12	93.72	93.32	92.93	92.55	92.27	91.99	91.71	91.44	91.16	90.89	90.63	90.36	90.10	89.84
②	100.00	99.65	99.29	98.94	98.59	98.25	97.90	97.56	97.22	96.89	96.56	96.13	95.72	95.31	94.91	94.51	94.11	93.72	93.33	92.95	92.57	92.29	92.01	91.73	91.46	91.20	90.93	90.67	90.40	90.14	89.88
③	99.82	99.48	99.14	98.80	98.46	98.13	97.79	97.46	97.13	96.81	96.49	96.08	95.68	95.29	94.89	94.51	94.12	93.74	93.36	92.99	92.62	92.35	92.08	91.81	91.55	91.29	91.03	90.78	90.52	90.27	90.02
④	99.67	99.34	99.01	98.68	98.35	98.03	97.70	97.38	97.06	96.75	96.44	96.04	95.66	95.27	94.90	94.52	94.15	93.78	93.41	93.05	92.69	92.43	92.16	91.91	91.65	91.40	91.15	90.90	90.65	90.40	90.16
⑤	99.54	99.22	98.90	98.58	98.26	97.95	97.63	97.32	97.02	96.71	96.41	96.03	95.65	95.28	94.91	94.55	94.19	93.83	93.47	93.12	92.77	92.51	92.26	92.01	91.76	91.52	91.27	91.03	90.79	90.55	90.31
⑥	99.50	99.18	98.86	98.55	98.24	97.92	97.61	97.31	97.00	96.70	96.41	96.03	95.65	95.29	94.92	94.56	94.20	93.85	93.49	93.15	92.81	92.55	92.30	92.05	91.81	91.56	91.32	91.08	90.84	90.61	90.37

BILL OF REINFORCEMENT

Location	Mark	Number Required
End Diaphragms	4S9	138
	4S10	69
	5S1	138
	*5S7	33
	*5S8	30
	532-7	10
	537-1	10
	*6S5	32
	*6S6	32
	Weight	1845 LB
	*Weight	*1872 LB
Slab and Curbs	*4S2	154
	*4S3	152
	*421-5	32
	*421-9	32
	*430-7	32
	*440-0	1
	*440-9	1
	*440-10	1
	*441-1	1
	*441-5	1
	*441-9	1
	*442-0	1
	*442-9	1
	*451-5	2
	*452-5	2
	*5S4	114
	*522-5	35
	*528-4	116
	*560-0	70
	*Set 2 Bars	1
	*Set 4 Bars	1
	*628-4	116
	*632-7	4
	*637-1	4
	*Set 1 Bars	1
	*Set 3 Bars	1
	*726-0	64
	*Weight	*26,679 LB

Bending Diagrams

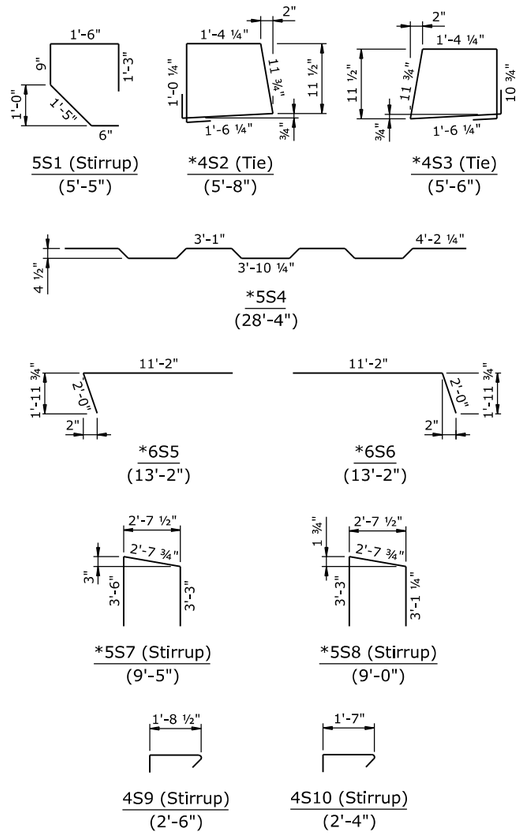

Set Diagrams

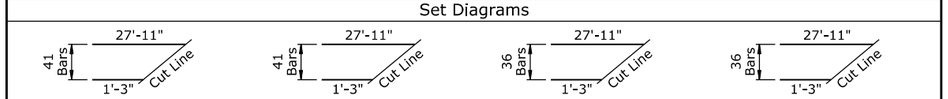

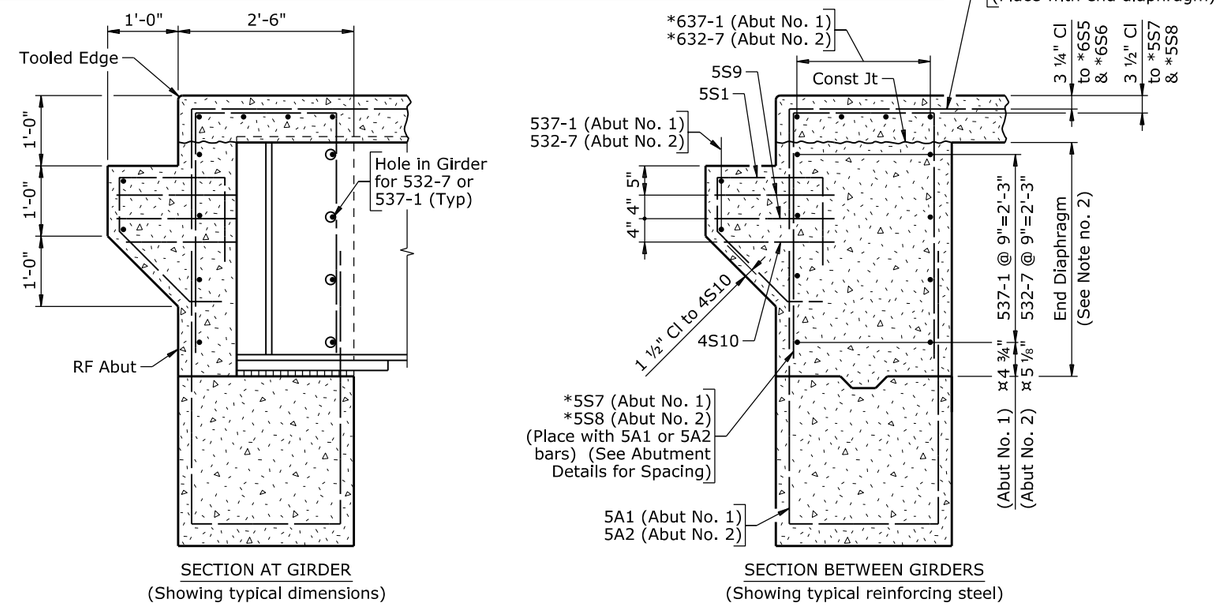

TYPICAL SECTIONS THRU END DIAPHRAGM

(Dimensions are perpendicular to RF Abut)

Note:
1) Ensure the reinforcing steel fabricator prefixes superstructure bar marks with numeral 5.
2) Ensure end diaphragms attain 80% of ultimate design strength (f'c) by cylinder tests before placing slab.
¤3) Dimension is at edge of end diaphragm.
4) The estimated quantity of class A concrete for slab is as follows:
   End Diaphragms --------- 20.2 CY
   Slab --------- 100.1 CY
   Curbs --------- 8.2 CY
5) For Abutment Details, see Sheets No. 8 & 9.
6) For location of Detail A, see Sheet No. 17.

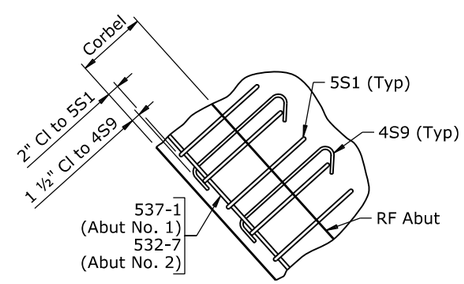

DETAIL A

(Showing corbel reinforcing steel placement)
(4S9 shown, 4S10 similar)
(Abut No. 1 shown, Abut No. 2 similar)

WYOMING DEPARTMENT OF TRANSPORTATION
BRIDGE PROGRAM

REVISIONS

SLAB DETAILS

BRIDGE OVER NORTH LARAMIE RIVER

STA 104+44

Fletcher Park Road

0800005 Pl

REVIEW	DESIGN GGG ✓ EEE	Design Section	L M Nop
APPROVAL	DETAIL AAA ✓ GGG		
	QTY'S CCC ✓ AAA	Drwg No. 0003	Sheet 19 of 19

0800005_1sl3.dgn