MGS GUARDRAIL STANDARD PLAN
INDEX OF SHEETS

SHEET	TOPIC
	LAYOUT DETAILS
1	General Requirements
2	Guardrail Placement Around Fixed Object Hazards
3	Grading Requirements
4	Grading Requirements (continued)
	INSTALLATION DETAILS
5	Standard Run of MGS Guardrail
6	Transition A - to TL-3 Steel Bridge Rail
7	Transition B - to TL-4 Steel Bridge Rail
8	Transition C - To New Jersey Concrete Barrier
9	Transition D - To Single Slope Concrete Barrier
10	Terminal Type I (Option 1 - SKT MGS, Sheet 1 of 2)
11	Terminal Type I (Option 1 - SKT MGS, Sheet 2 of 2)
12	Terminal Type I (Option 2 - ET-31, Sheet 1 of 2)
13	Terminal Type I (Option 2 - ET-31, Sheet 2 of 2)
14	Terminal Type II (Option 1 - FLEAT MGS, Sheet 1 of 2)
15	Terminal Type II (Option 1 - FLEAT MGS, Sheet 2 of 2)
16	MGS Long Span
17	MGS Half Post Spacing
	MGS Quarter Post Spacing
	MGS Long Post - Constricted Slope Grading
	MGS 8" [205] Blocks
18	Post Placement in Pavements and Rock

Initiating a straight guardrail flare - Initiate a 1W:15L guardrail flare (typical for high speed roadways) as shown below:

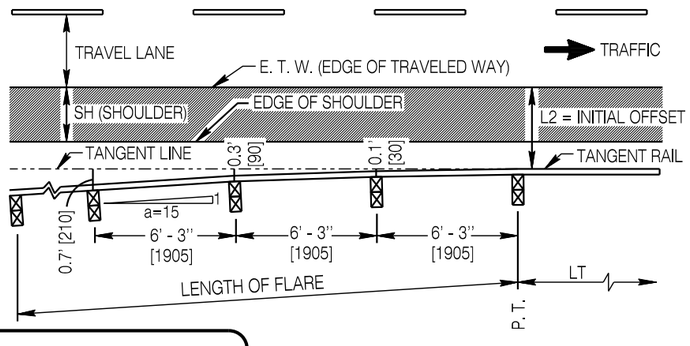

TYPICAL 1W:15L FLARE LAYOUT

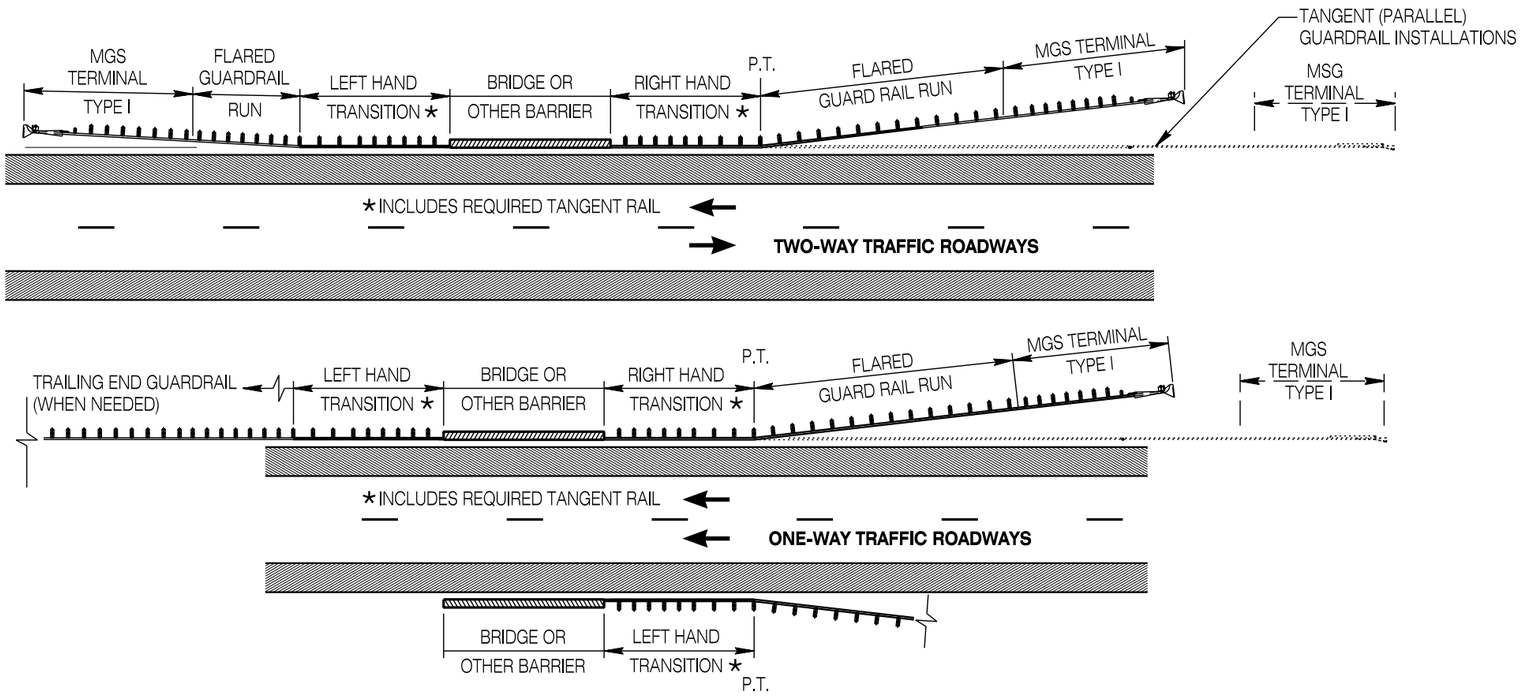

CONNECTIONS TO BRIDGE RAILING AND OTHER TRAFFIC BARRIERS

Connect MGS guardrail to bridge rail and/or concrete barrier using the appropriate transition section at all ends receiving guardrail.

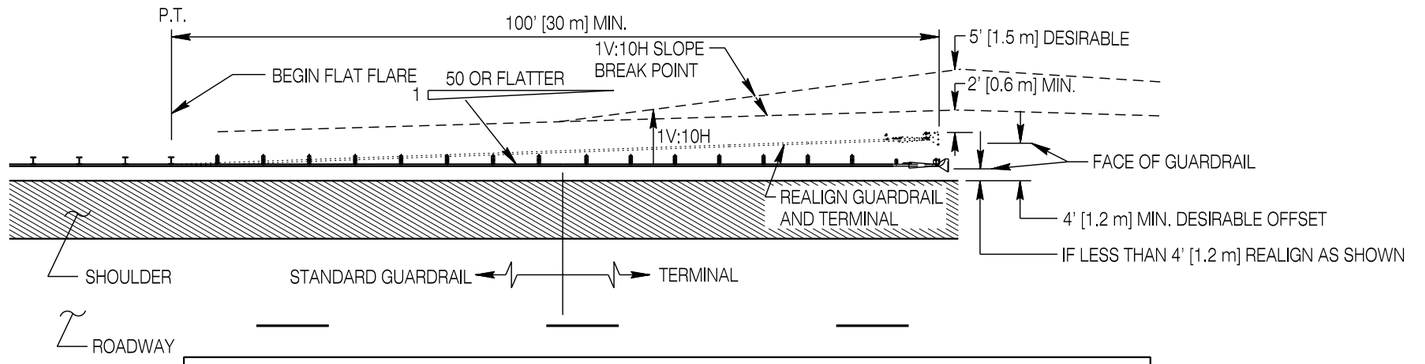

TANGENT (PARALLEL) GUARDRAIL INSTALLATIONS WHERE FACE OF GUARDRAIL IS LESS THAN 4 FEET [1.2 m] FROM THE EDGE OF SHOULDER

For tangent (parallel) guardrail installations within 4 feet [1.2 m] of the edge of the shoulder, realign a minimum of the last 100 feet [30 m] of guardrail on a flat flare to obtain up to a 4 foot [1.2 m] offset at the terminal, assuming adequate grading can be provided behind the guardrail and terminal. Maintain 1V:10H slopes from the shoulder to a minimum of 2 feet [0.6 m] behind the terminal or more desirably to 5 feet [1.5 m] behind the terminal.

Designed by: WBW Drawn by: JK Checked by: WBW Previous Dwg. No. NEW	GENERAL REQUIREMENTS	WYOMING DEPARTMENT OF TRANSPORTATION	MGS GUARDRAIL STANDARD PLAN
Note: Units shown in brackets [ ] are metric and are in millimeters (mm) unless other units are shown.			STANDARD PLAN NUMBER 606-2 SHEET 1 of 18 Issued by: ENGINEERING SERVICES Date Issued: OCTOBER 2013

NOTES

① **Shielding Fixed Object Hazards -** Do not place the guardrail any closer than the working width of the system to fixed object hazards which extend above ground line behind. Working width is the minimum distance from front face of the guardrail to the closest exposed face of a fixed object hazard located behind the guardrail.

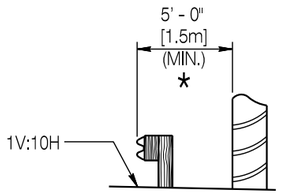

SECTION A - A
PROPER GUARDRAIL PLACEMENT

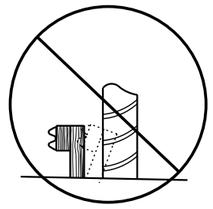

INCORRECT GUARDRAIL PLACEMENT

For fixed object hazards within close proximity of the guardrail (up to 1 1/2 ft. [0.5 m] plus the working width of the system), place a minimum of 25 ft. [7.6 m] of guardrail tangent (parallel) to the roadway on both the upstream and downstream end of the guardrail before flaring. When using reduced post spacing, extend the reduced spacing 25 ft. [7.5 m] upstream and downstream of the hazard and place tangent (parallel) to the roadway.

System	Post Spacing	Working Width *
Standard MGS	6' - 3'' [1905]	5 ft. [1.5 m]
MGS Half Post Spacing	3' - 1 1/2'' [950]	4 ft. [1.2 m]
MGS Quarter Post Spacing	1' - 6 3/4'' [475]	3 ft. [0.9 m]
MGS with Long Post & Steep Slope Behind	6' - 3" [1905]	5 1/2 ft [1.7 m]
MGS Long Span	Up to 25' [7.6 m]	8 ft. [2.4 m]

② **Flared vs. Tangent (Parallel) Installation -** Drawing depicts flared guardrail runs with solid lines and tangent (parallel) installations in dashed lines.

③ **Flared Terminals -** If Terminal Type II is specified, provide the required terminal offset flare in addition to any guardrail flare or to a tangent alignment.

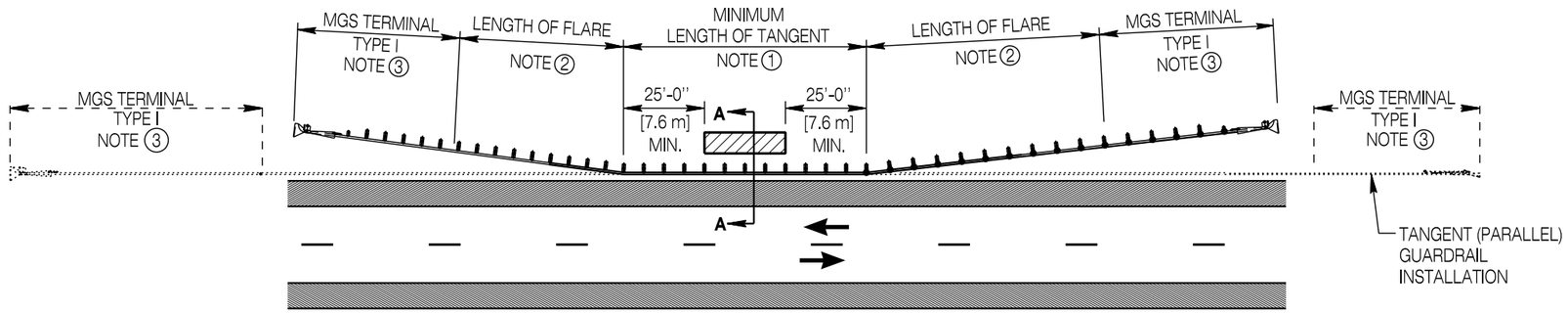

TYPICAL GUARDRAIL PLACEMENT AROUND A FIXED OBJECT

TWO WAY TRAFFIC ROADWAYS

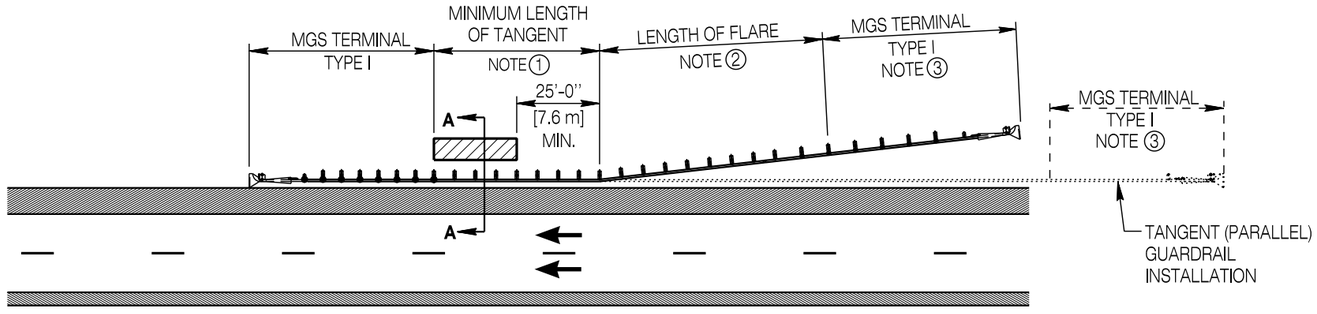

TYPICAL GUARDRAIL PLACEMENT AROUND A FIXED OBJECT

ONE WAY TRAFFIC ROADWAYS SUCH AS DIVIDED HIGHWAYS

Designed by:	WBW
Drawn by:	JK
Checked by:	WBW
Previous Dwg. No.	NEW

GUARDRAIL PLACEMENT AROUND FIXED OBJECT HAZARDS

Note: Units shown in brackets [ ] are metric and are in millimeters (mm) unless other units are shown.

WYOMING DEPARTMENT OF TRANSPORTATION

MGS GUARDRAIL

STANDARD PLAN

STANDARD PLAN NUMBER
606-2
SHEET 2 of 18
Issued by: ENGINEERING SERVICES
Date Issued: OCTOBER 2013

GRADING NOTES

If necessary, modify the earthwork shown in the plans and as staked to provide these minimum grading requirements at guardrail installations. The engineer will pay for this work using standard grading bid items as provided in the plans.

① Ensure the cross-slope of the earthwork in the area approaching a guardrail installation, the area around the terminal and the area of the guardrail flare is a 1V:10H surface or flatter.

② Ensure cross slope of grading from roadway to the barrier face is 1V:10H or flatter. Extend 1V:10H a minimum of 2 ft. [610] behind the guardrail posts. The department may specify 1V:8H for the guardrail installation where drainage and/or snow accumulation must be mitigated.

③ Ensure the area immediately behind and beyond the terminal is traversable and free from fixed object hazards or at least similar in character to upstream, unshielded slopes located within the clear-zone. Ensure a slope of 1V:4H or flatter; if not practical, use a maximum slope of 1V:3H. Extend the traversable slope for a distance X beyond post 3 of the end terminal.

If not shown in the plans, calculate X from the formula below:

$$X = (CZ - Y)(L_R) / (CZ)$$

DESIGN SPEED		L_R Runout Length							
		ADT OVER 10,000		ADT 5,000 to 10,000		ADT 1,000 to 5,000		ADT Under 1000	
mph	[km/h]	ft	[m]	ft	[m]	ft	[m]	ft	[m]
80	130	470	143	430	131	380	116	330	101
70	110	360	110	330	101	290	88	250	76
60	100	300	91	250	76	210	64	200	61
50	80	230	70	190	58	160	49	150	46
40	60	160	49	130	40	110	34	100	30
30	50	110	34	90	27	80	24	70	21

④ For tangent guardrail installations where the face of the guardrail at the impact head of the terminal is less than 4 ft. [1.2 m] from the shoulder break point, realign the guardrail and terminal as shown in detail on **SHEET 1** of this standard plan.

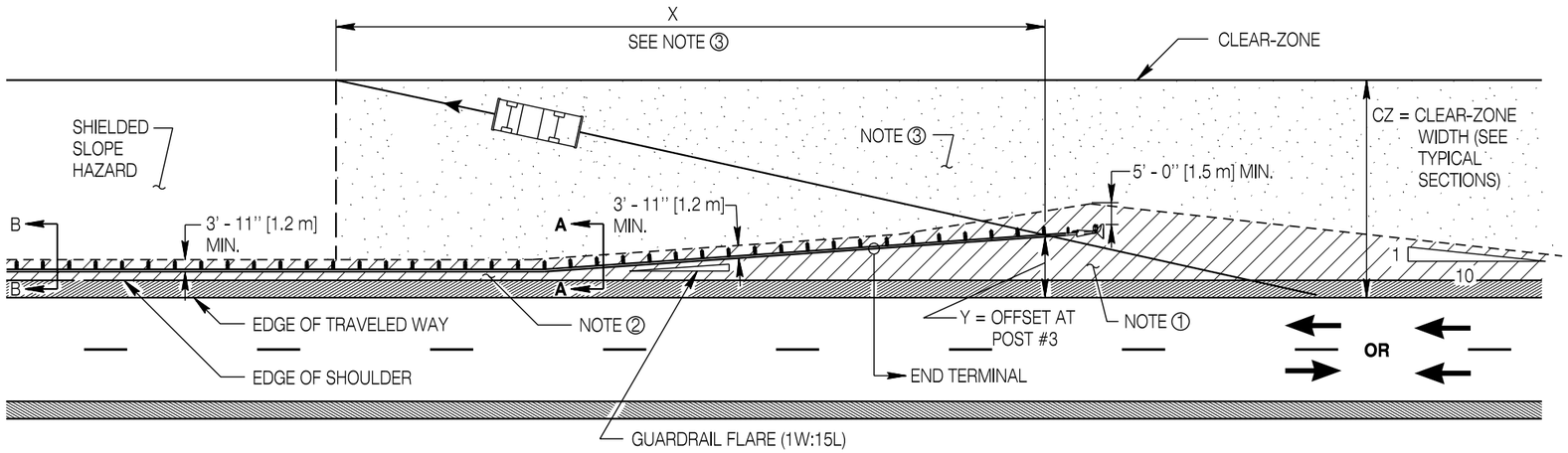

APPROACH END GRADING - FLARED GUARDRAIL INSTALLATION

(APPLIES TO TWO WAY TRAFFIC AND ONE WAY TRAFFIC ROADWAYS SUCH AS DIVIDED HIGHWAYS)

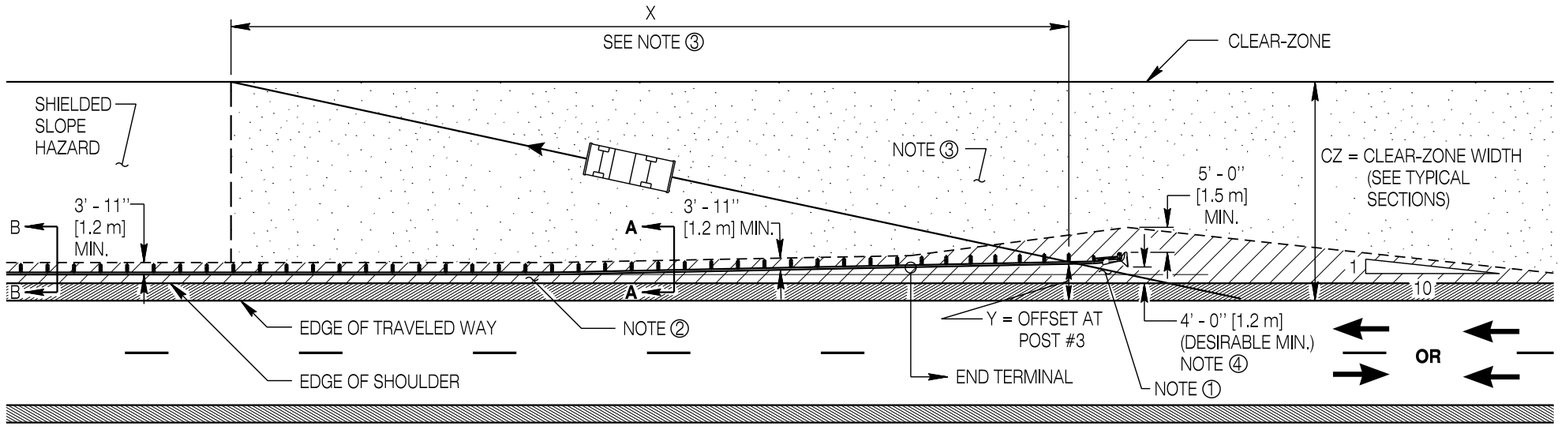

APPROACH END GRADING - TANGENT (PARALLEL) GUARDRAIL INSTALLATION

(APPLIES TO TWO WAY TRAFFIC AND ONE WAY TRAFFIC ROADWAYS SUCH AS DIVIDED HIGHWAYS)

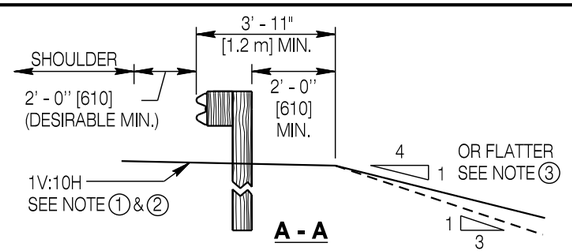

RUNOUT GRADING BEHIND GUARDRAIL

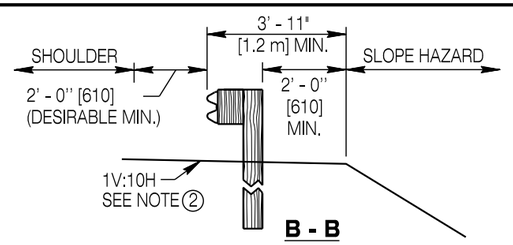

FILL SLOPE HAZARD PROTECTION

Designed by: WBW	
Drawn by: JK	
Checked by: WBW	
Previous Dwg. No. NEW	

GRADING REQUIREMENTS

Note: Units shown in brackets [ ] are metric and are in millimeters (mm) unless other units are shown.

WYOMING DEPARTMENT OF TRANSPORTATION

MGS GUARDRAIL

STANDARD PLAN

STANDARD PLAN NUMBER
606-2
SHEET 3 of 18
Issued by: ENGINEERING SERVICES
Date Issued: OCTOBER 2013

GRADING NOTES

If necessary, modify the earthwork shown in the plans and as staked to provide these minimum grading requirements at guardrail installations. The engineer will pay for this work using standard grading bid items as provided in the plans.

① Ensure the cross-slope of the earthwork in the area approaching a guardrail installation, the area around the terminal and the area of the guardrail flare is a 1V:10H surface or flatter.

② Ensure cross slope of grading from roadway to the barrier face is 1V:10H or flatter. Extend 1V:10H a minimum of 2 ft. [610] behind the guardrail posts. The department may specify 1V:8H for the guardrail installation where drainage and/or snow accumulation must be mitigated.

③ Ensure the area immediately behind and beyond the terminal is traversable and free from fixed object hazards or at least similar in character to upstream, unshielded slopes located within the clear-zone. Ensure a slope of 1V:4H or flatter; if not practical, use a maximum slope of 1V:3H. Extend the traversable slope for a distance X beyond post 3 of the end terminal.

If not shown in the plans, calculate X from the formula below:

$$X = (CZ - Y)\,(L_R)\,/\,(CZ)$$

DESIGN SPEED		L_R Runout Length							
		ADT OVER 10,000		ADT 5,000 to 10,000		ADT 1,000 to 5,000		ADT Under 1000	
mph	[km/h]	ft	[m]	ft	[m]	ft	[m]	ft	[m]
80	130	470	143	430	131	380	116	330	101
70	110	360	110	330	101	290	88	250	76
60	100	300	91	250	76	210	64	200	61
50	80	230	70	190	58	160	49	150	46
40	60	160	49	130	40	110	34	100	30
30	50	110	34	90	27	80	24	70	21

④ For tangent guardrail installations where the face of the guardrail at the impact head of the terminal is less than 4 ft. [1.2 m] from the shoulder break point, realign the guardrail and terminal as shown in detail on **SHEET 1** of this standard plan.

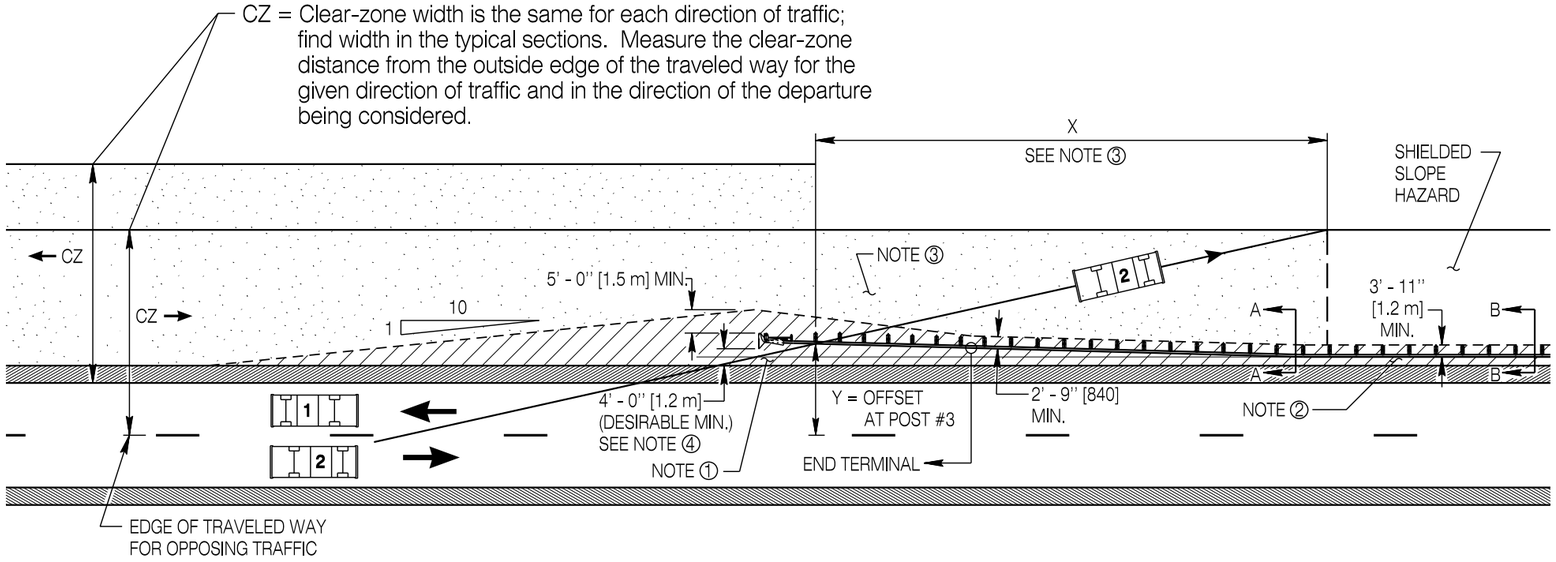

APPROACH END GRADING FOR OPPOSING TRAFFIC LANES

(APPLIES TO TWO WAY TRAFFIC ROADWAYS)

Note: Tangent installation shown, apply same concept for flared installations

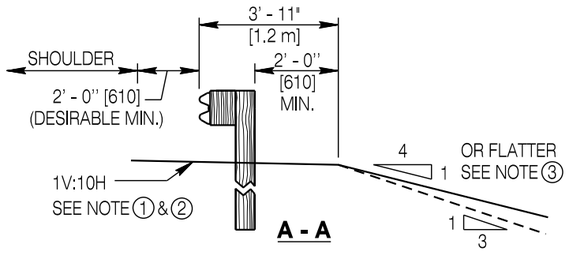

RUNOUT GRADING BEHIND GUARDRAIL

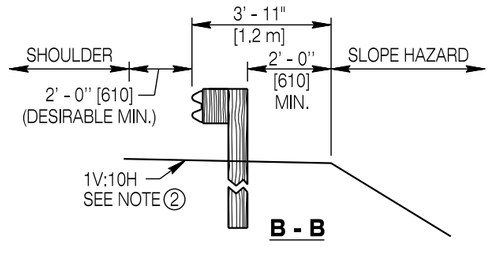

FILL SLOPE HAZARD PROTECTION

Designed by:	WBW
Drawn by:	JK
Checked by:	WBW
Previous Dwg. No.	NEW

GRADING REQUIREMENTS (CONTINUED)

Note: Units shown in brackets [ ] are metric and are in millimeters (mm) unless other units are shown.

WYOMING DEPARTMENT OF TRANSPORTATION

MGS GUARDRAIL

STANDARD PLAN

STANDARD PLAN NUMBER
606-2
SHEET 4 of 18
Issued by: ENGINEERING SERVICES
Date Issued: OCTOBER 2013

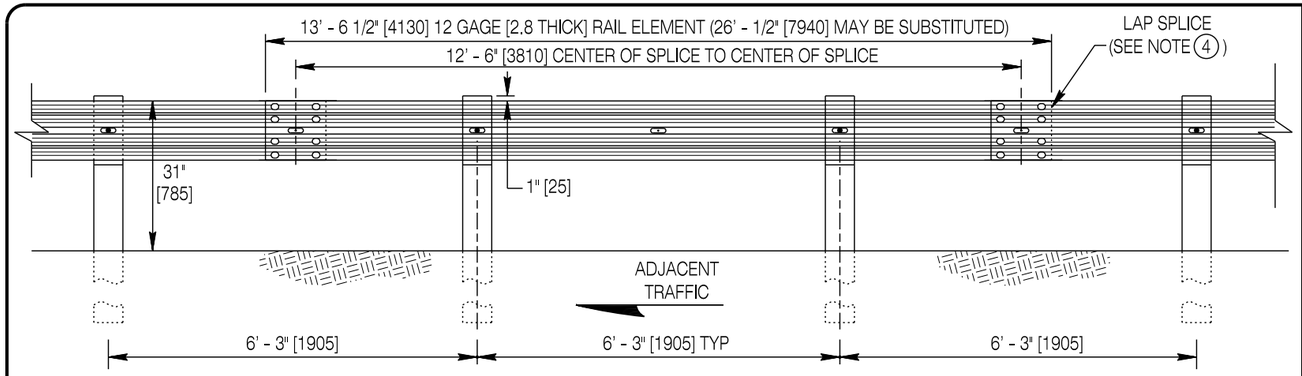

STANDARD MGS GUARDRAIL

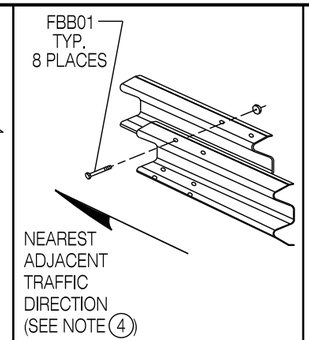

RAIL SPLICE DETAIL

GENERAL NOTES

1. DO NOT use washers between the head of the guardrail bolt and rail element unless specifically shown in the plans.
2. Use post dimensions based on timber species in accordance with the material requirements in the Standard Specifications.
3. All wood cross-section dimensions shown are nominal dimensions.
4. Lap rails and end shoes so exposed rail edge is downstream of the nearest adjacent traffic direction.

RAIL LAP DETAIL

5. Install reflective tabs every 25 ft. [7.6 m]. Typically install every 4th post.

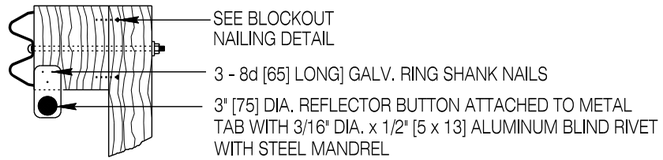

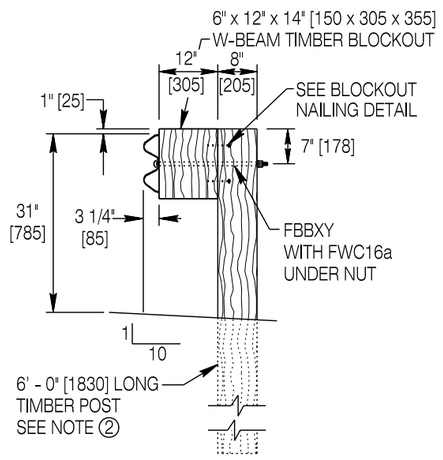

STANDARD MGS WOOD POST DETAIL

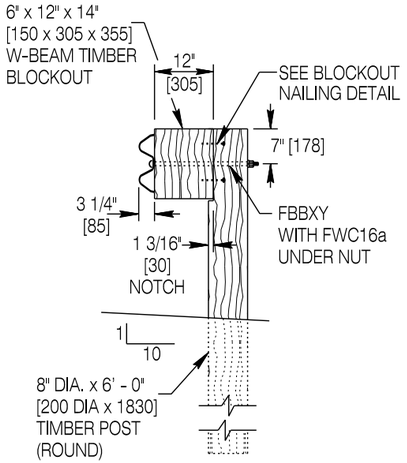

ALTERNATE MGS ROUND WOOD POST DETAIL

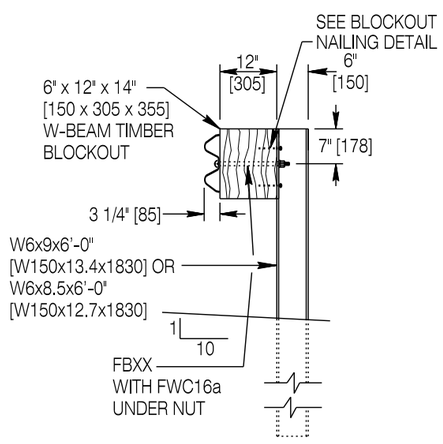

ALTERNATE MGS WITH STEEL POST DETAIL

WOOD POST **STEEL POST**

Nail blockout (to prevent rotation) to post, top & bottom, both sides, (4 locations) using 20d [105 long] galvanized nails. If blockouts are two piece design, nail first blockout to second blockout in similar fashion as wood post detail.

BLOCKOUT NAILING DETAIL

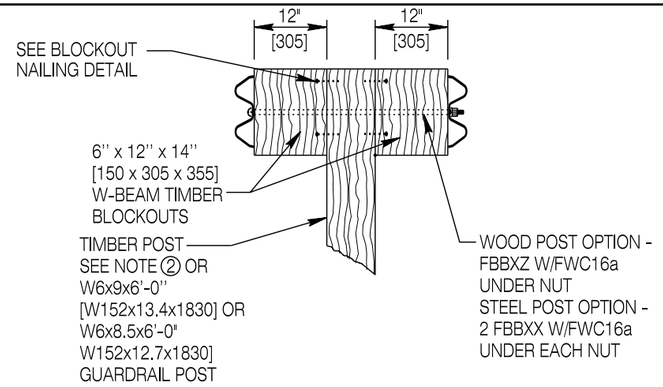

TYPICAL MEDIAN POST DETAIL

STANDARD GUARDRAIL BOLTS

*DESIGNATOR	
FBB01	5/8" x 1 1/4" [16 x 32] BUTTON HEAD GUARDRAIL BOLT WITH NUT
FBBXX	5/8" x 14" [16 x 355] BUTTON HEAD GUARDRAIL BOLT WITH NUT
FBBXY	5/8" x 22" [16 x 560] BUTTON HEAD GUARDRAIL BOLT WITH NUT
FBBXZ	5/8" x 34" [16 x 865] BUTTON HEAD GUARDRAIL BOLT WITH NUT
FWC16a	ROUND WASHER FOR 5/8" [16] GUARDRAIL BOLT

*TASK FORCE13 STANDARD BARRIER GUIDE

Designed by:	WBW
Drawn by:	JK
Checked by:	WBW
Previous Dwg. No.	NEW

STANDARD RUN OF MGS GUARDRAIL

Note: Units shown in brackets [ ] are metric and are in millimeters (mm) unless other units are shown.

WYOMING DEPARTMENT OF TRANSPORTATION

MGS GUARDRAIL

STANDARD PLAN

STANDARD PLAN NUMBER
606-2
SHEET 5 of 18
Issued by: ENGINEERING SERVICES
Date Issued: OCTOBER 2013

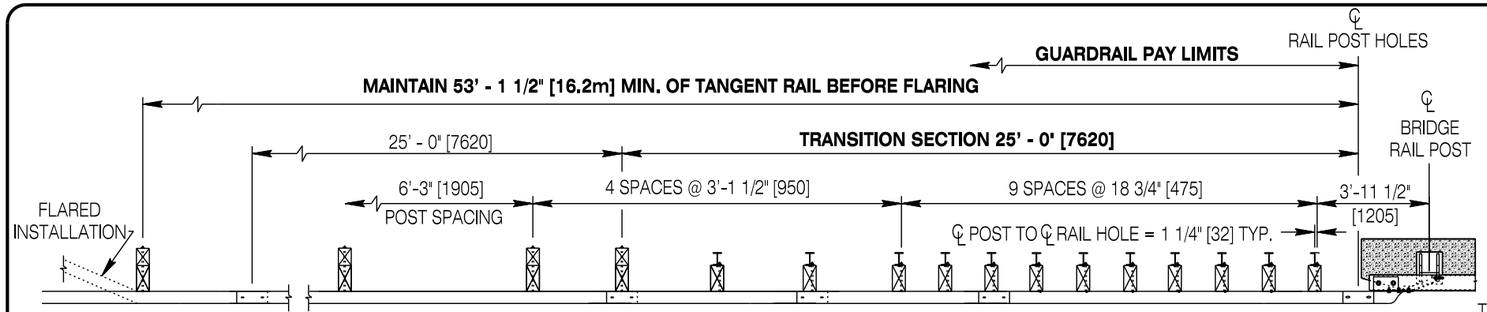

PLAN VIEW

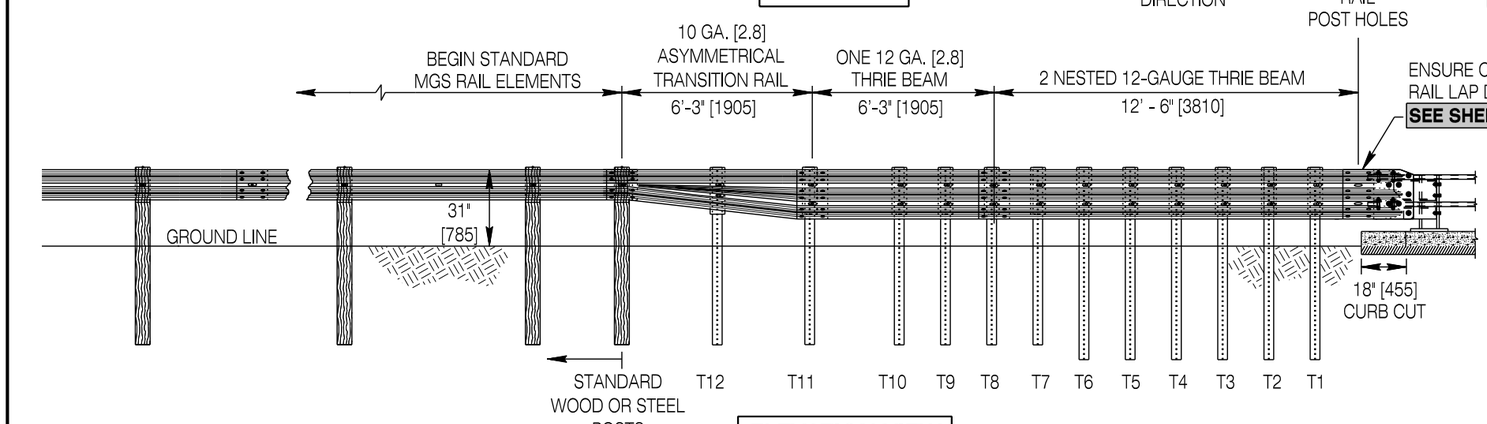

ELEVATION VIEW

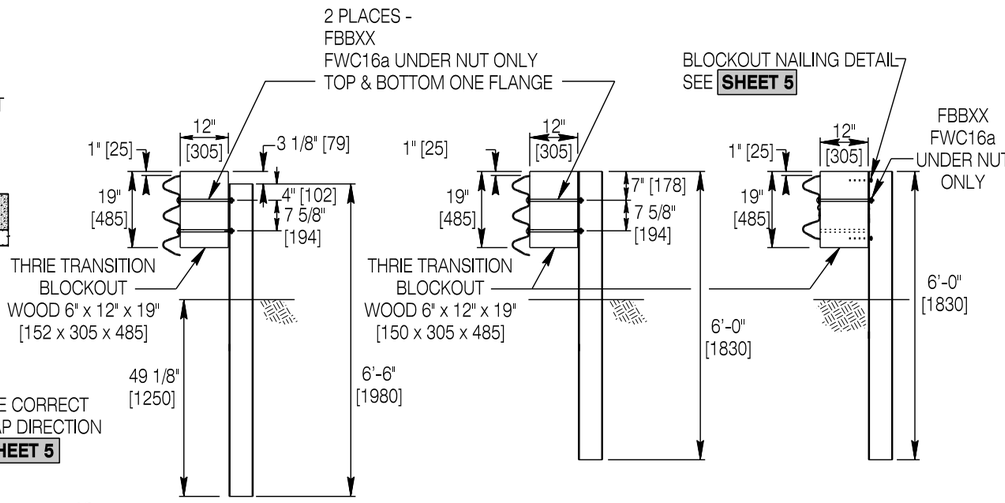

POSTS T1 - T6
6'-6" [1930] LONG

POSTS T7 - T11
6'-0" [1830] LONG

POST T12
6'-0" [1830] LONG

USE W6x9 OR W6x8.5 [W152x13.5 OR W152x12.7] STEEL POSTS

TRANSITION POSTS

LEFT HAND TRANSITION SHOWN (MIRROR DETAILS FOR RIGHT HAND TRANSITION)

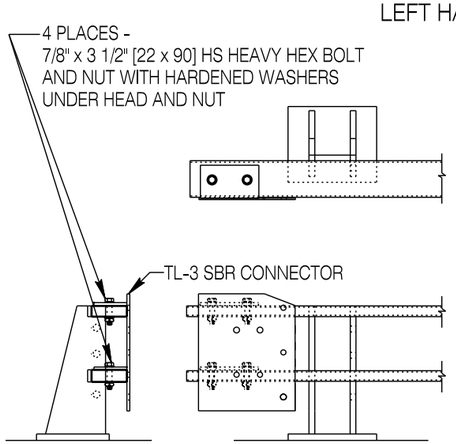

INSTALLATION OF TL-3 SBR CONNECTOR

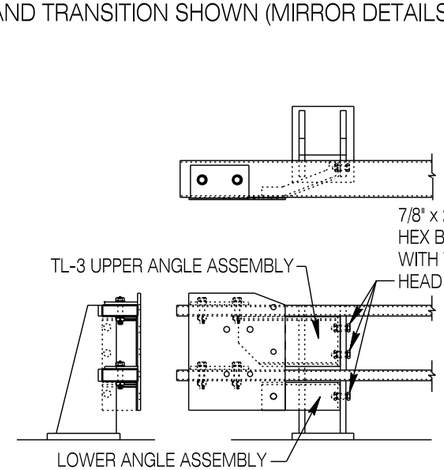

INSTALLATION OF ANGLE ASSEMBLIES

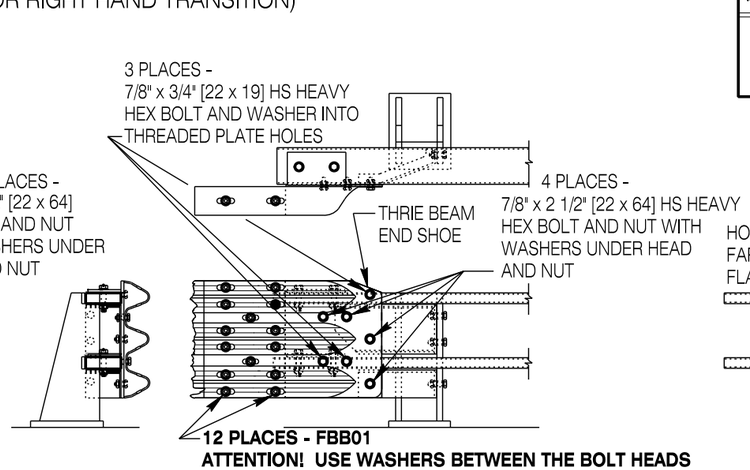

INSTALLATION OF THRIE-BEAM END SHOE

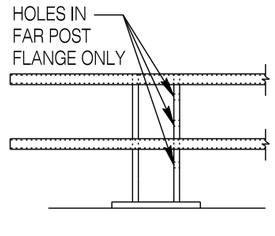

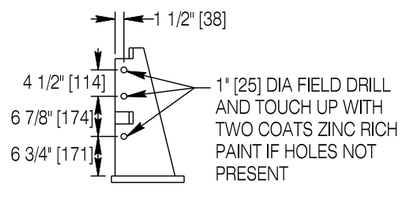

ANGLE PLATE MOUNTING HOLES

STANDARD GUARDRAIL BOLTS

*DESIGNATOR	
FBB01	5/8" x 1 1/4" [16 x 32] BUTTON HEAD GUARDRAIL BOLT W/NUT
FBBXX	5/8" x 14" [16 x 355] BUTTON HEAD GUARDRAIL BOLT W/NUT
FWC16a	ROUND WASHER FOR 5/8" [16] BOLT

* TASK FORCE13 STANDARD BARRIER GUIDE

Designed by:	WBW
Drawn by:	JK
Checked by:	WBW
Previous Dwg. No.	NEW

TRANSITION A - TO TL-3 STEEL BRIDGE RAIL

Note: Units shown in brackets [ ] are metric and are in millimeters (mm) unless other units are shown.

WYOMING DEPARTMENT OF TRANSPORTATION

MGS GUARDRAIL

STANDARD PLAN

STANDARD PLAN NUMBER
606-2
SHEET 6 of 18
Issued by: ENGINEERING SERVICES
Date Issued: OCTOBER 2013

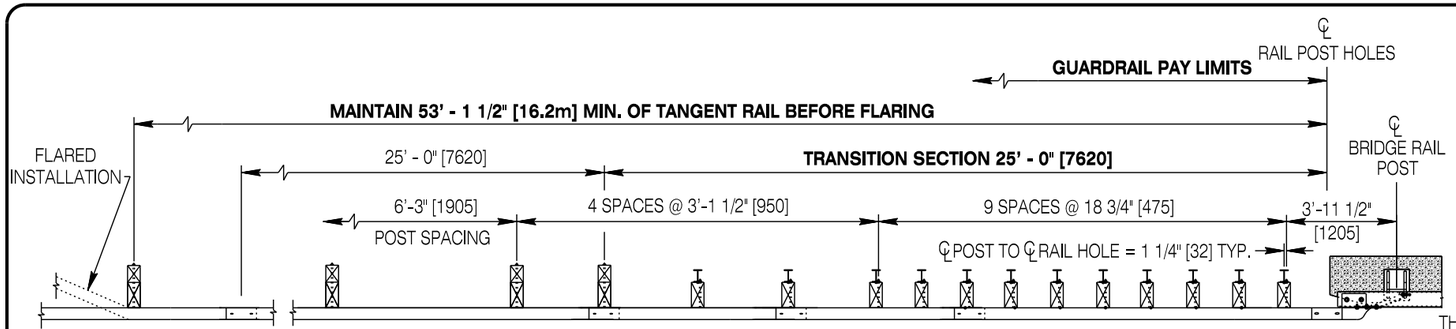

PLAN VIEW

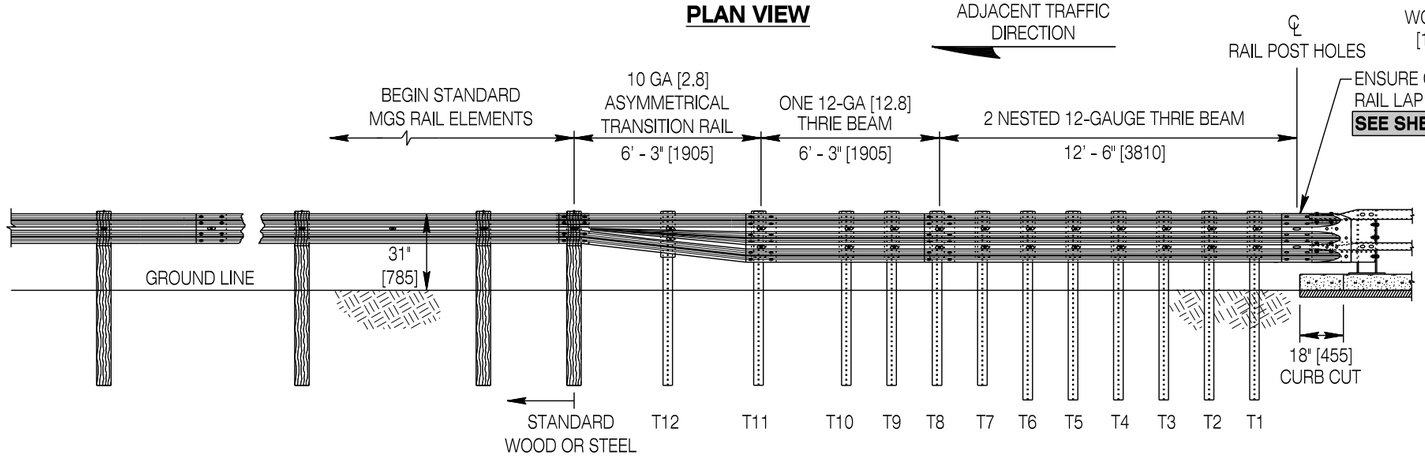

ELEVATION VIEW

Left hand transition shown
(Mirror details for right hand transition).

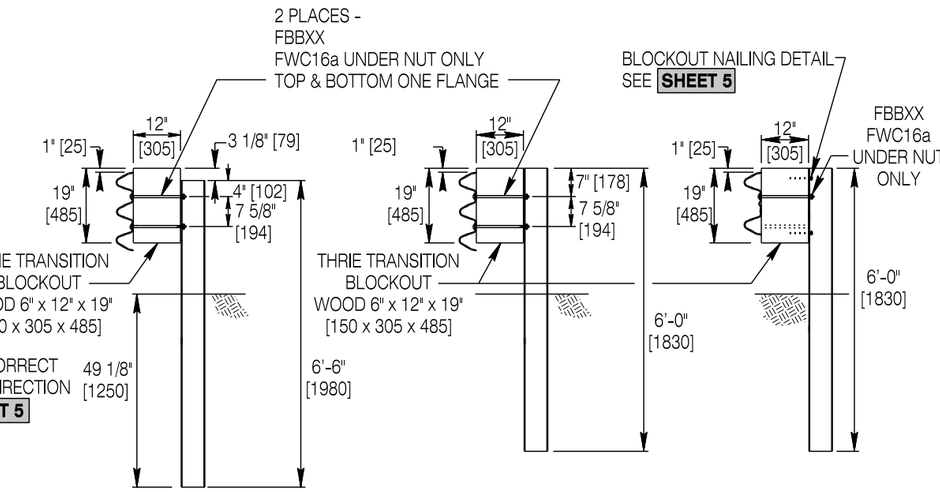

POSTS T1 - T6
6'-6" [1930] LONG

POSTS T7 - T11
6'-0" [1830] LONG

POST T12
6'-0" [1830] LONG

4 1/2" [115] CURB CUT

USE W6x9 OR W6x8.5 [W152x13.5 OR W152x12.7] STEEL POSTS

TRANSITION POSTS

STANDARD GUARDRAIL BOLTS

*DESIGNATOR	
FBB01	5/8" x 1 1/4" [16 x 32] BUTTON HEAD GUARDRAIL BOLT W/NUT
FBBXX	5/8" x 14" [16 x 355] BUTTON HEAD GUARDRAIL BOLT W/NUT
FWC16a	ROUND WASHER FOR 5/8" [16] BOLT

* TASK FORCE13 STANDARD BARRIER GUIDE

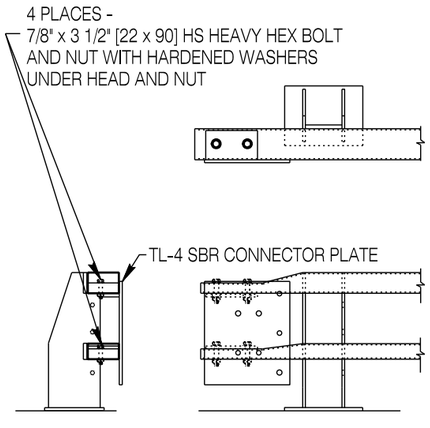

INSTALLATION OF TL-4 SBR CONNECTOR

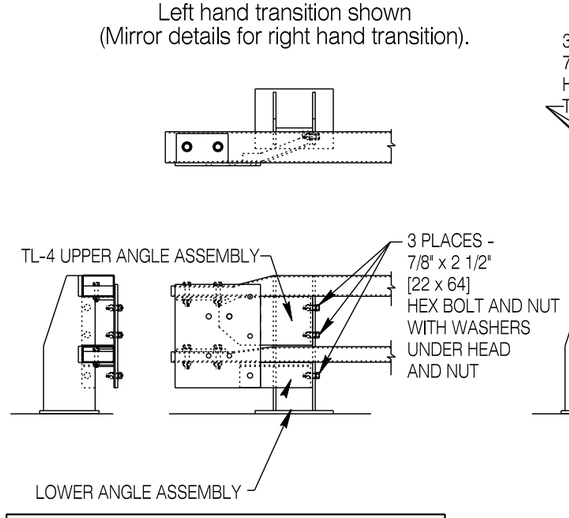

INSTALLATION OF ANGLE ASSEMBLIES

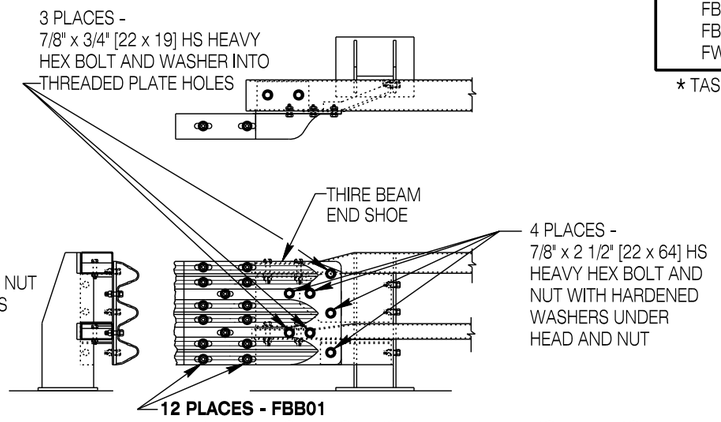

INSTALLATION OF THRIE-BEAM END SHOE

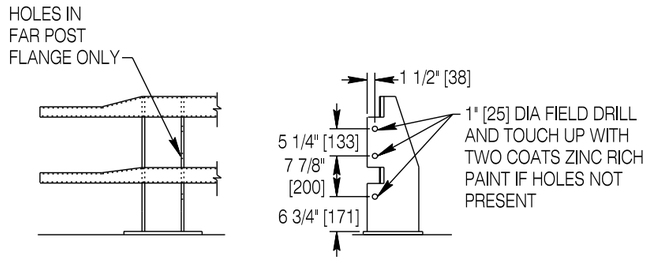

ANGLE PLATE MOUNTING HOLES

Designed by:	WBW
Drawn by:	JK
Checked by:	WBW
Previous Dwg. No.	NEW

TRANSITION B - TO TL-4 STEEL BRIDGE RAIL

Note: Units shown in brackets [ ] are metric and are in millimeters (mm) unless other units are shown.

WYOMING DEPARTMENT OF TRANSPORTATION

MGS GUARDRAIL

STANDARD PLAN

STANDARD PLAN NUMBER
606-2
SHEET 7 of 18
Issued by: ENGINEERING SERVICES
Date Issued: OCTOBER 2013

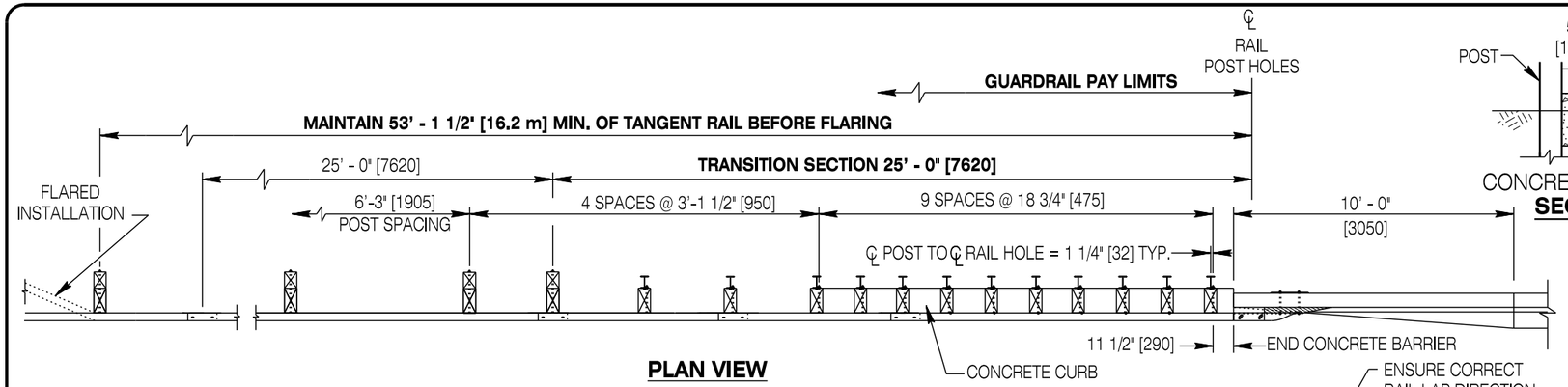

PLAN VIEW

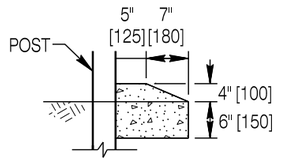

CONCRETE CURB DETAIL
SECTION A-A

12 PLACES-FBB01
ATTENTION! USE WASHERS BETWEEN THE BOLT HEADS AND THE END SHOE WHEN END SHOE IS PLACED ON OUTSIDE OF THE THRIE BEAM.

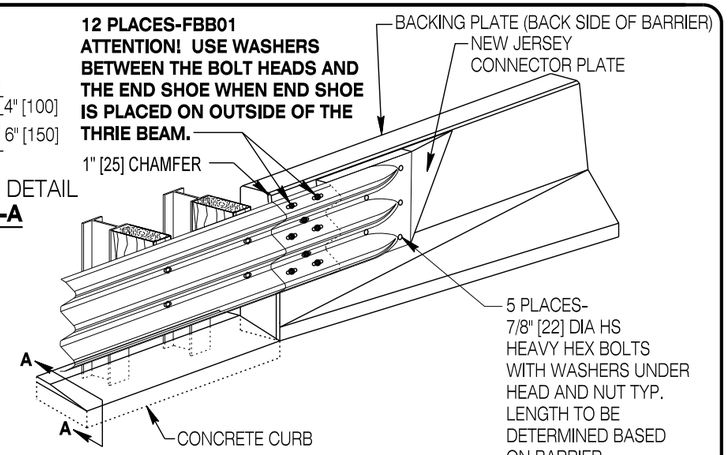

ISOMETRIC VIEW

ADJACENT TRAFFIC DIRECTION

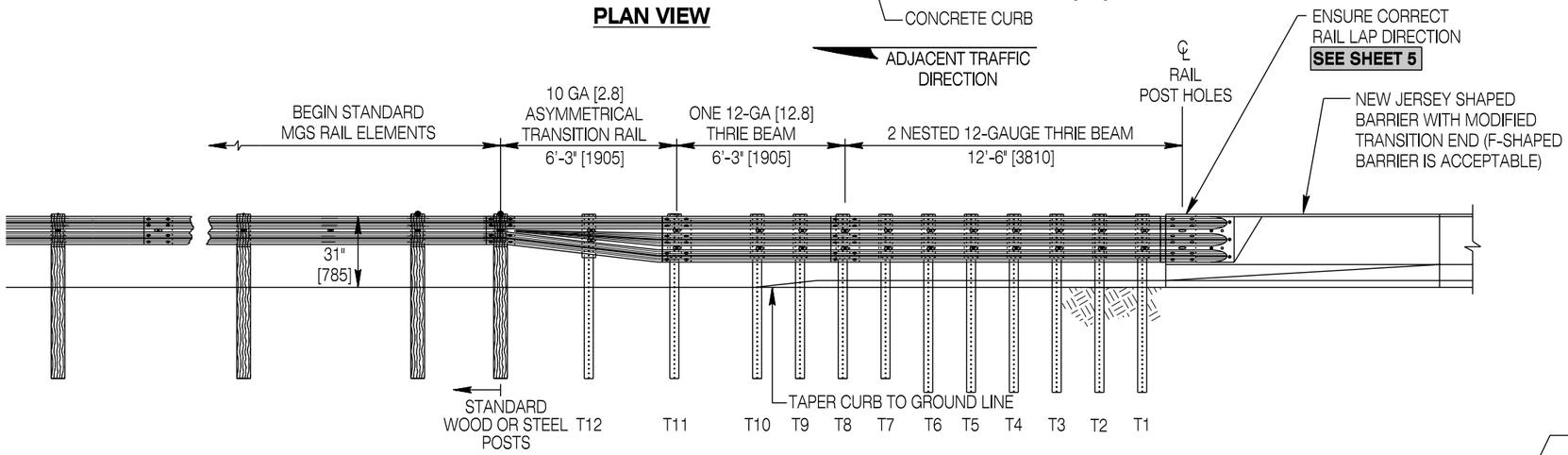

ELEVATION VIEW
Left hand transition shown
(Mirror details for right hand transition).

STANDARD GUARDRAIL BOLTS	
***DESIGNATOR**	
FBB01	5/8" x 1 1/4" [16 x 32] BUTTON HEAD GUARDRAIL BOLT W/NUT
FBBXX	5/8" x 14" [16 x 355] BUTTON HEAD GUARDRAIL BOLT W/NUT
FWC16a	ROUND WASHER FOR 5/8" [16] BOLT

* TASK FORCE13 STANDARD BARRIER GUIDE

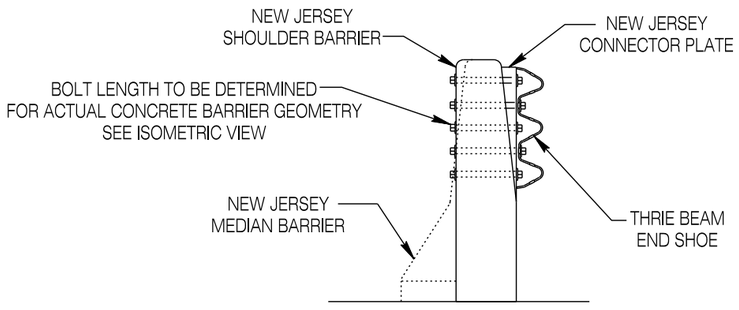

END VIEW

NEW JERSEY CONCRETE BARRIER

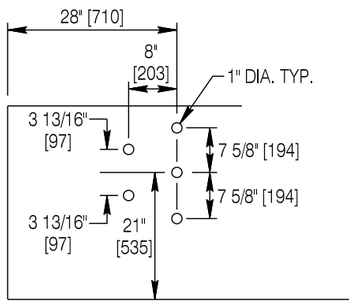

HOLE DRILLING PATTERN FOR CONCRETE BARRIER

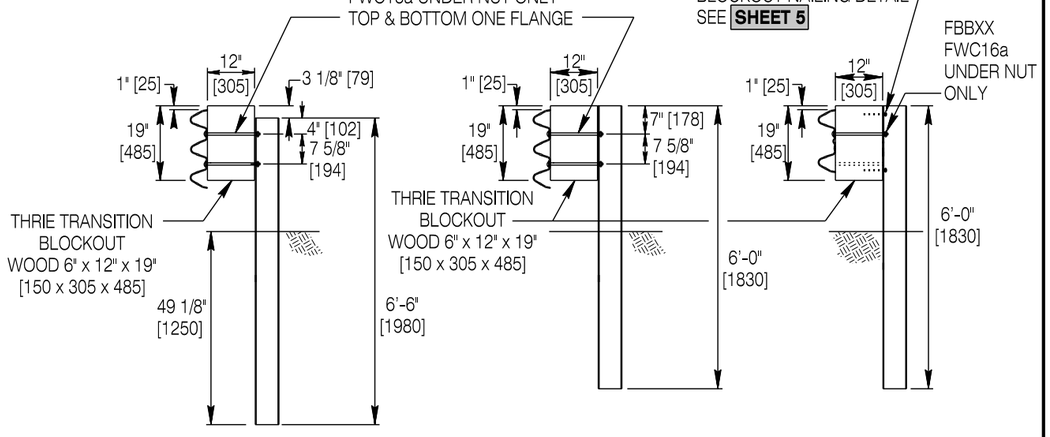

POSTS T1 - T6
6'-6" [1930] LONG

POSTS T7 - T11
6'-0" [1830] LONG

POST T12
6'-0" [1830] LONG

USE W6x9 OR W6x8.5 [W152x13.5 OR W152x12.7] STEEL POSTS

TRANSITION POSTS

Designed by:	WBW
Drawn by:	JK
Checked by:	WBW
Previous Dwg. No.	NEW

TRANSITION C - TO NEW JERSEY CONCRETE BARRIER

Note: Units shown in brackets [ ] are metric and are in millimeters (mm) unless other units are shown.

WYOMING DEPARTMENT OF TRANSPORTATION

MGS GUARDRAIL

STANDARD PLAN

STANDARD PLAN NUMBER
606-2
SHEET 8 of 18
Issued by: ENGINEERING SERVICES
Date Issued: OCTOBER 2013

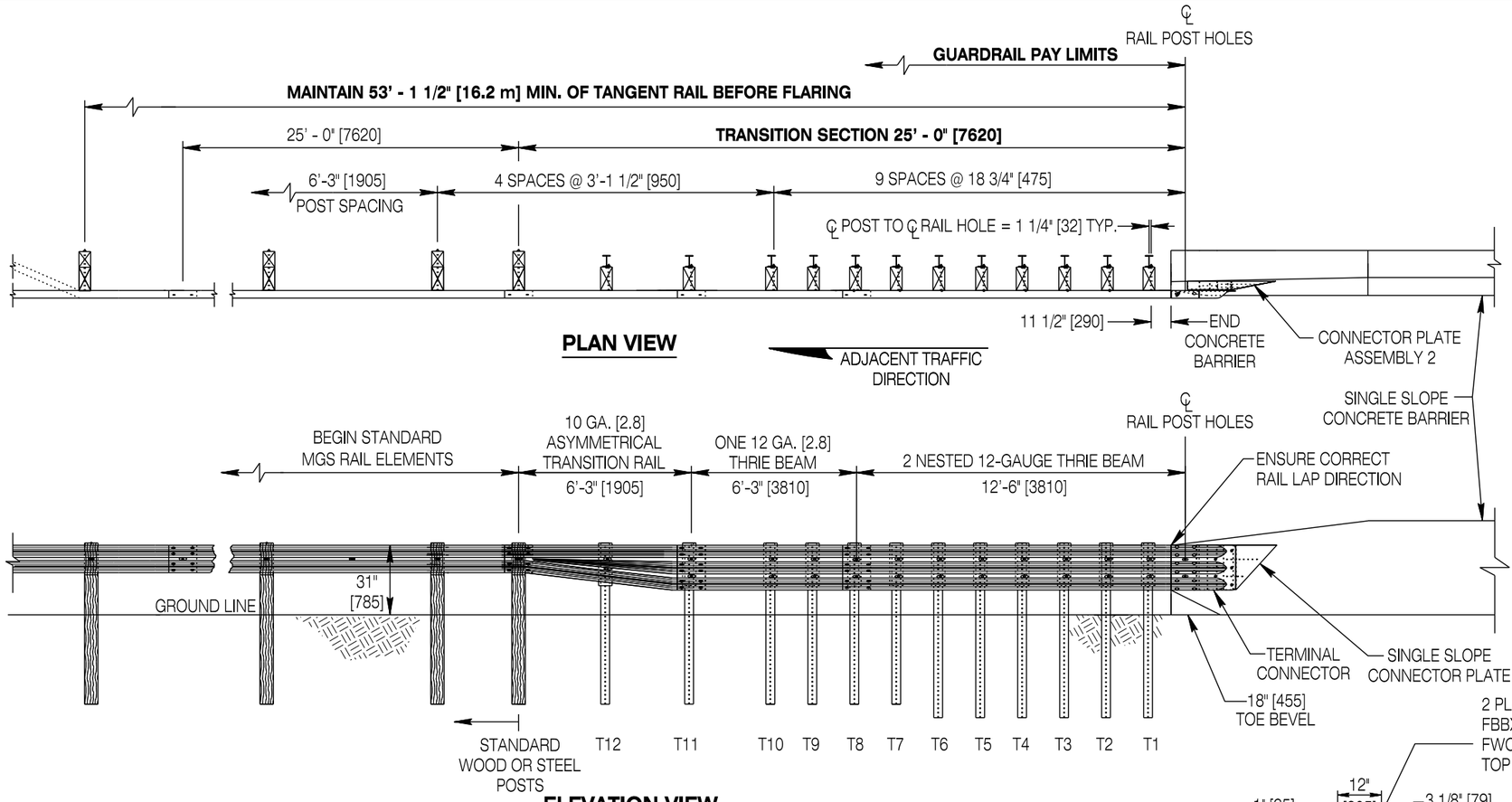

PLAN VIEW

ELEVATION VIEW
Left hand transition shown
(Mirror details for right hand transition).

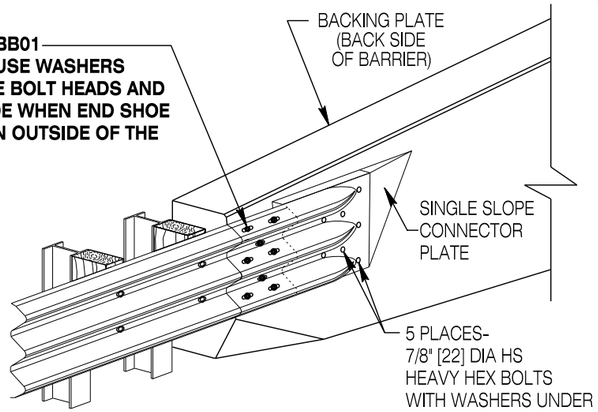

ISOMETRIC VIEW

STANDARD GUARDRAIL BOLTS	
***DESIGNATOR**	
FBB01	5/8" x 1 1/4" [35 x 32] BUTTON HEAD GUARDRAIL BOLT W/NUT
FBBXX	5/8" x 14" [16 x 355] BUTTON HEAD GUARDRAIL BOLT W/NUT
FWC16a	ROUND WASHER FOR 5/8" [16] BOLT

* TASK FORCE13 STANDARD BARRIER GUIDE

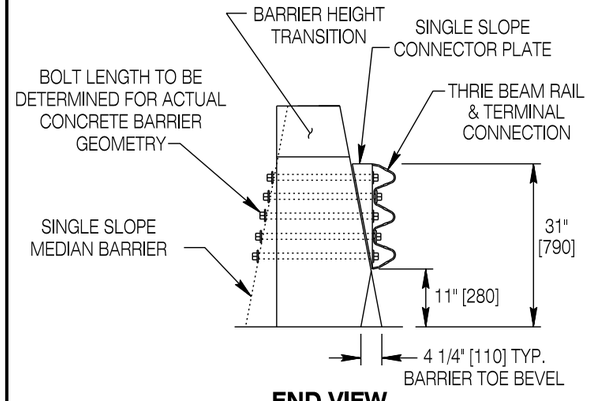

END VIEW
SINGLE SLOPE CONCRETE BARRIER

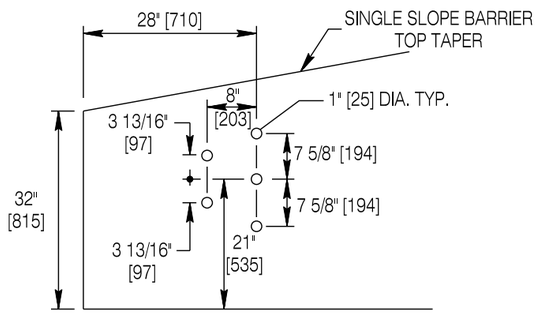

HOLE DRILLING PATTERN FOR CONCRETE BARRIER

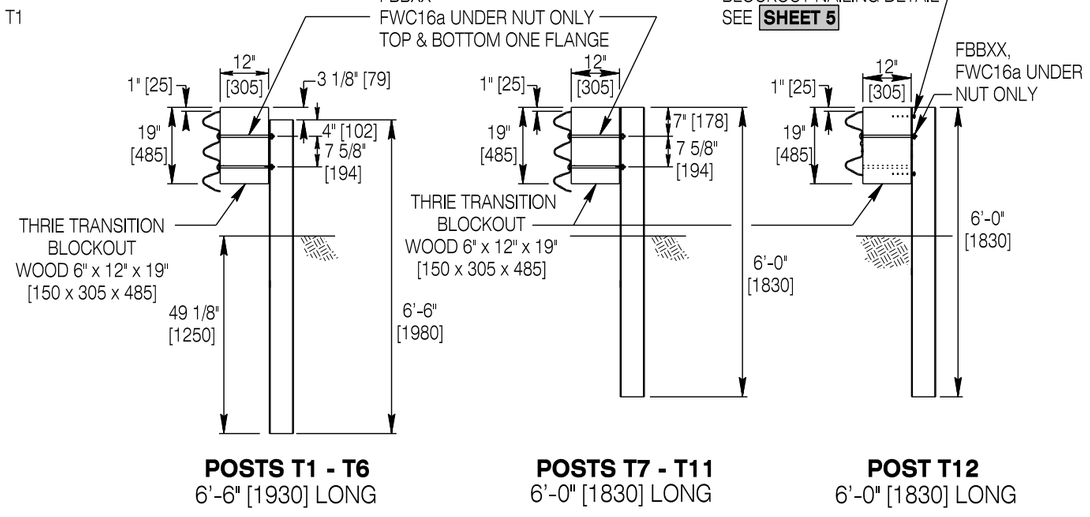

POSTS T1 - T6
6'-6" [1930] LONG

POSTS T7 - T11
6'-0" [1830] LONG

POST T12
6'-0" [1830] LONG

USE W6x9 OR W6x8.5 [W152x13.5 OR W152x12.7] STEEL POSTS

TRANSITION POSTS

Designed by: WBW	TRANSITION D - TO SINGLE SLOPE CONCRETE BARRIER
Drawn by: JK	
Checked by: WBW	
Previous Dwg. No. NEW	

Note: Units shown in brackets [ ] are metric and are in millimeters (mm) unless other units are shown.

WYOMING DEPARTMENT OF TRANSPORTATION

MGS GUARDRAIL

STANDARD PLAN

STANDARD PLAN NUMBER
606-2
SHEET 9 of 18
Issued by: ENGINEERING SERVICES
Date Issued: OCTOBER 2013

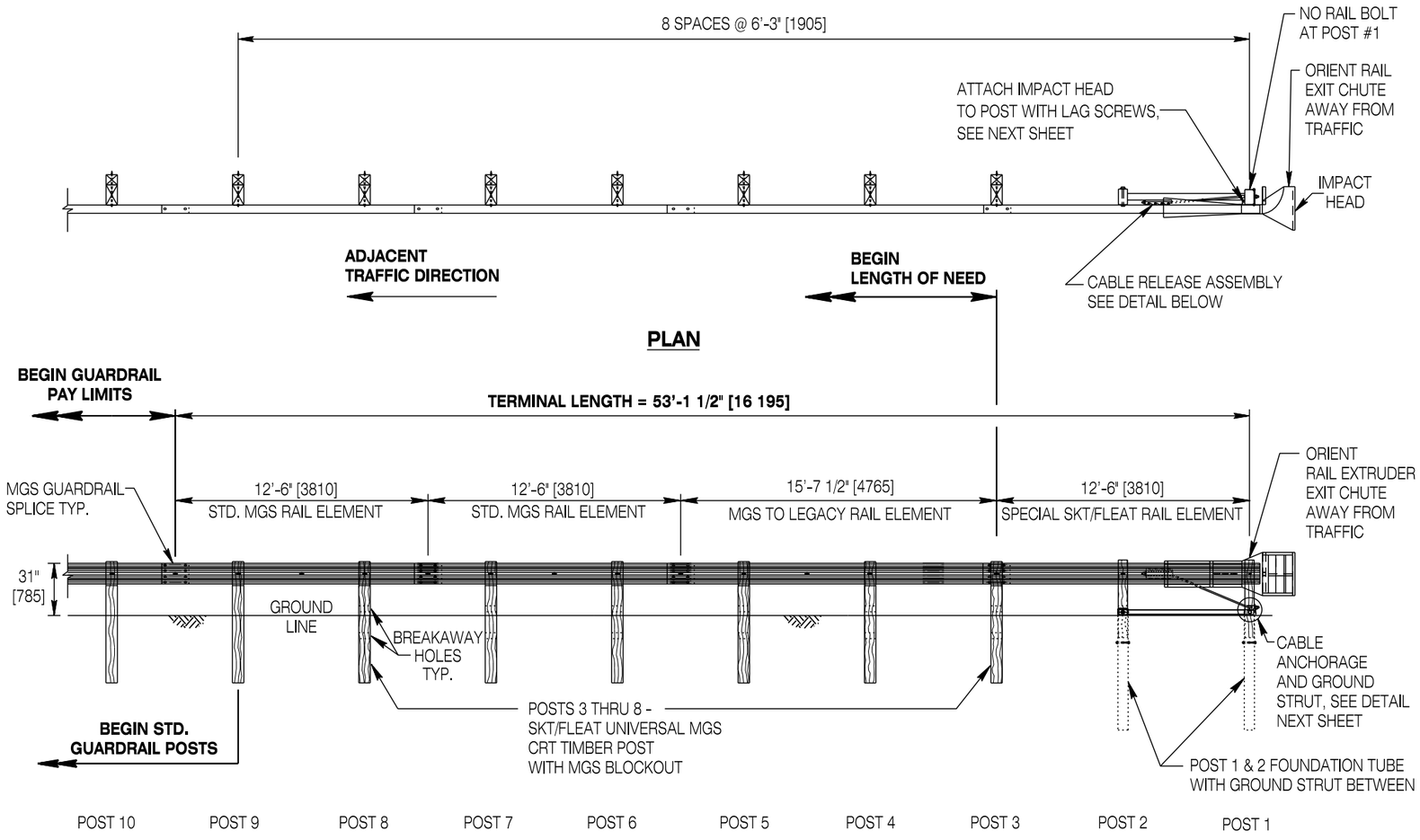

PLAN

ELEVATION

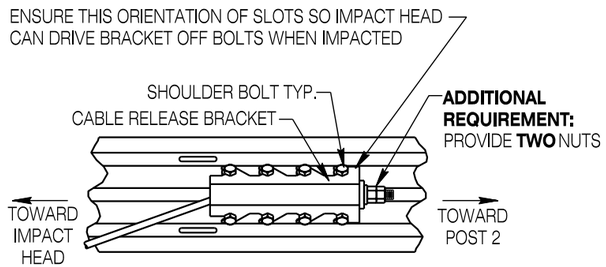

CABLE RELEASE ASSEMBLY ATTACHMENT

(BACK SIDE OF RAIL)

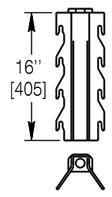

CABLE RELEASE ASSEMBLY

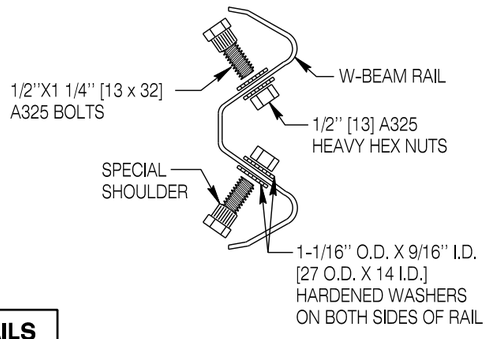

CABLE RELEASE ASSEMBLY DETAILS

NOTES

① The SKT MGS Terminal as shown herein is an acceptable option when "MGS Terminal Type I" is specified unless otherwise indicated in the contract.

The SKT MGS Terminal shown herein is proprietary and can only be manufactured and sold by Road Systems Inc. or its duly authorized representative.

Install in strict accordance to the manufacturer's installation manual and adhere to all warnings.

Any items shown as an "additional requirement" are over and above the manufacturer's standard product requirements.

Summary of additional requirements for the SKT / MGS:

A. Double nut each end of the cable anchor to prevent from loosening.

② Lap the upstream rail (for the adjacent traffic direction) over the downstream rail element at each splice. See rail lap detail on **SHEET 5**.

③ Attach impact head to post 1 as shown. Do not provide rail attachment bolt at post 1. Ensure rail hole aligns with post hole at post 1.

④ Drive soil tubes with an approved driving head which does not deform tubes. If the tubes are placed in drilled holes, place and compact backfill in lifts to prevent settlement.

⑤ The foundation tubes should not protrude more than 4 in. [100] above ground line. Correct site grading when necessary as directed by the engineer.

⑥ Ensure the cable anchor assembly is taut. Use a locking device (vice grips or channel locking pliers) to prevent twisting or untwisting of the cable when tightening nuts.

⑦ Ensure all bolts, nuts, cable assemblies, cable anchors and bearing plates are galvanized or coated to prevent corrosion.

Designed by: WBW	
Drawn by: JK	
Checked by: WBW	
Previous Dwg. No. NEW	

TERMINAL TYPE I (OPTION 1 - SKT MGS, SHEET 1 OF 2)

Note: Units shown in brackets [ ] are metric and are in millimeters (mm) unless other units are shown.

WYOMING DEPARTMENT OF TRANSPORTATION

MGS GUARDRAIL

STANDARD PLAN

STANDARD PLAN NUMBER
606-2
SHEET 10 of 18
Issued by: ENGINEERING SERVICES
Date Issued: OCTOBER 2013

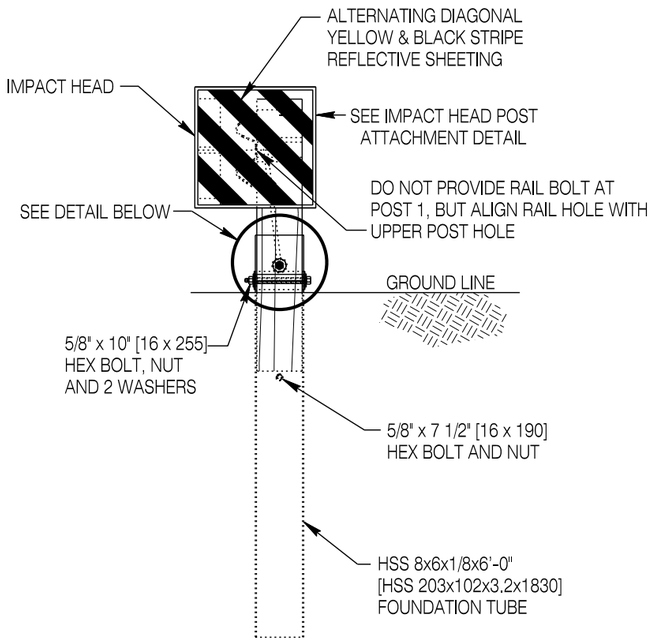

POST 1

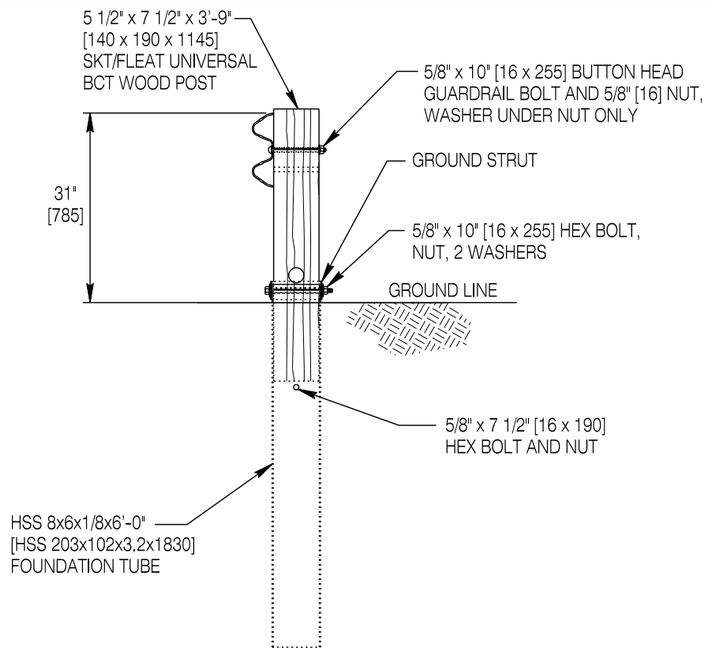

POST 2

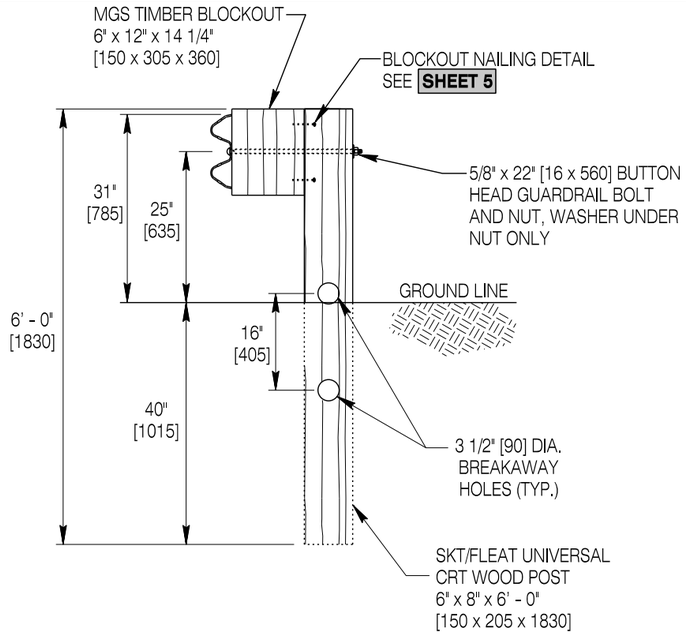

POST 3 THRU 8

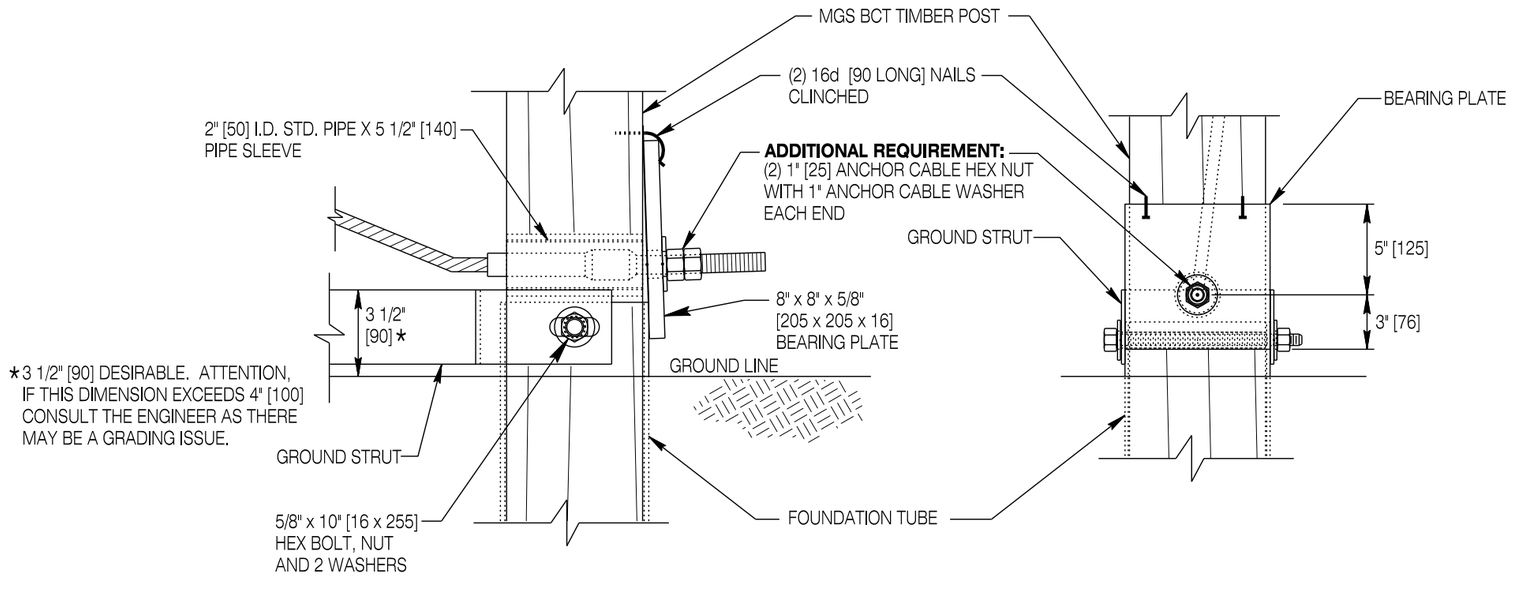

CABLE ANCHORAGE AND GROUND STRUT DETAILS

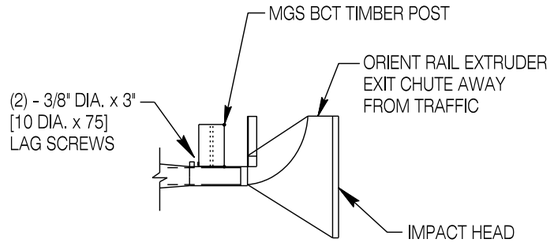

TOP VIEW

SKT IMPACT HEAD POST ATTACHMENT DETAIL

Designed by:	WBW
Drawn by:	JK
Checked by:	WBW
Previous Dwg. No.	NEW

TERMINAL TYPE I (OPTION 1 - SKT MGS, SHEET 2 OF 2)

Note: Units shown in brackets [ ] are metric and are in millimeters (mm) unless other units are shown.

WYOMING DEPARTMENT OF TRANSPORTATION

MGS GUARDRAIL

STANDARD PLAN

STANDARD PLAN NUMBER
606-2
SHEET 11 of 18
Issued by: ENGINEERING SERVICES
Date Issued: OCTOBER 2013

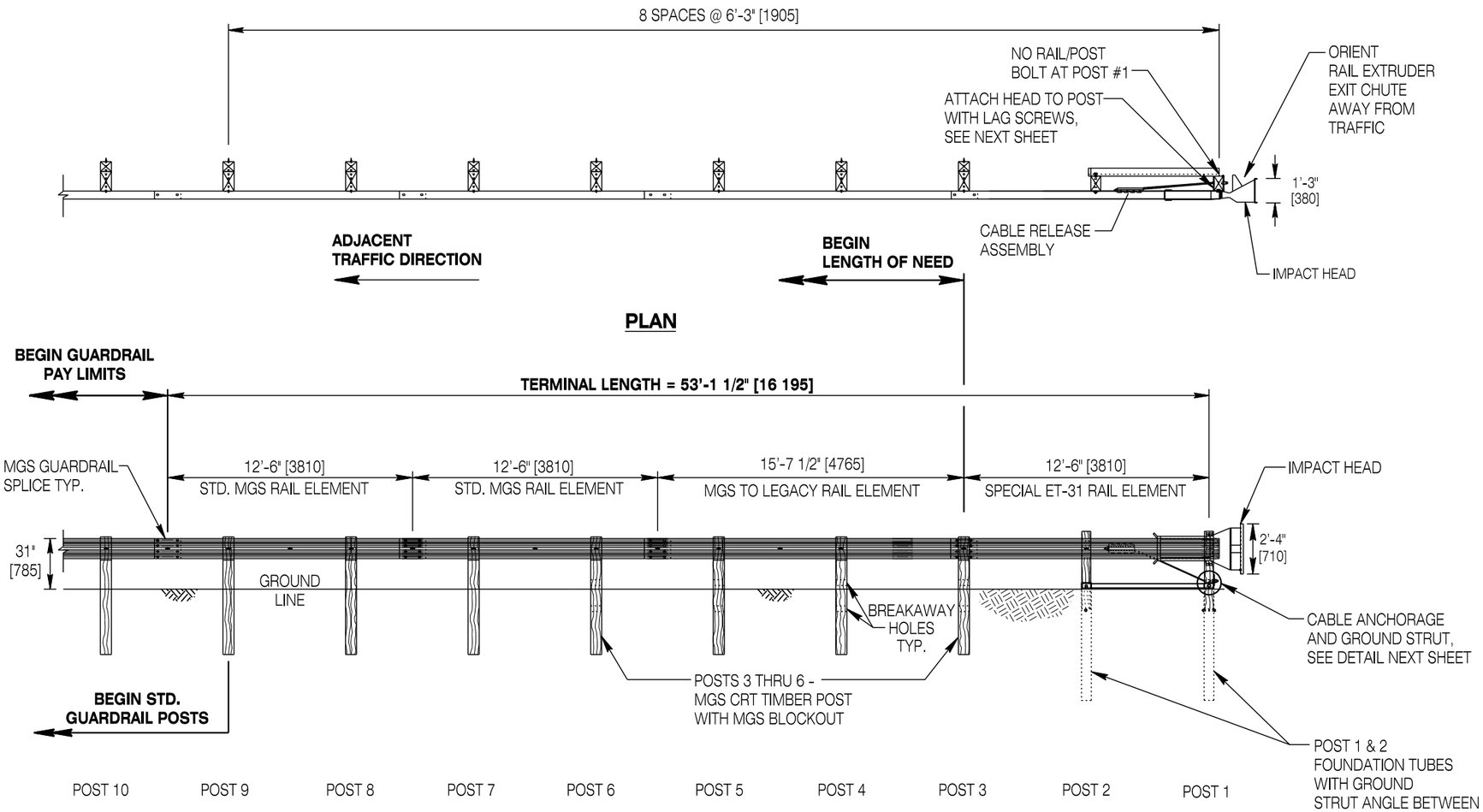

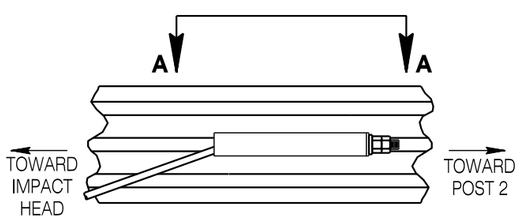

CABLE RELEASE ASSEMBLY ATTACHMENT

(BACK SIDE OF RAIL)

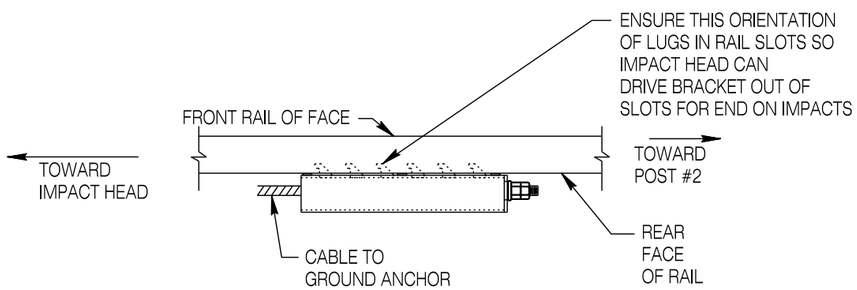

SECTION A-A

(TOP VIEW FROM BACK SIDE OF RAIL)

CABLE RELEASE ASSEMBLY DETAILS

NOTES

① The ET-31 Terminal as shown herein is an acceptable option when "MGS Terminal Type I" is specified unless otherwise indicated in the contract.

The ET-31 Terminal shown herein is proprietary and can only be manufactured and sold by Trinity Industries, Inc. or its duly authorized representative.

Install in strict accordance to the manufacturer's installation manual and adhere to all warnings.

Any items shown as an "additional requirement" are over and above the manufacturer's standard product requirement.

Summary of additional requirements for the ET-31:

A. Double nut each end of the cable anchor to prevent loosening.

B. Provide a two and one half space rail for the second rail element rather than the standard one and one half post space rail.

② Lap the upstream rail (for the adjacent traffic direction) over the downstream rail element at each splice. See rail lap detail on **SHEET 5**.

③ Attach impact head to post 1 as shown. Do not provide rail attachment bolt at post 1. Ensure rail hole aligns with post hole at post 1.

④ Drive soil tubes with an approved driving head which does not deform tubes. If the tubes are placed in drilled holes, place and compact backfill in lifts to prevent settlement.

⑤ The foundation tubes should not protrude more than 4 in. [100] above ground line. Correct site grading when necessary as directed by the engineer.

⑥ Ensure the cable anchor assembly is taut. Use a locking device (vice grips or channel locking pliers) to prevent twisting or untwisting of the cable when tightening nuts.

⑦ Ensure all bolts, nuts, cable assemblies, cable anchors and bearing plates are galvanized or coated to prevent corrosion.

Designed by: WBW Drawn by: JK Checked by: WBW Previous Dwg. No. NEW	TERMINAL TYPE I (OPTION 2 - ET-31, SHEET 1 OF 2)	WYOMING DEPARTMENT OF TRANSPORTATION	MGS GUARDRAIL STANDARD PLAN

Note: Units shown in brackets [ ] are metric and are in millimeters (mm) unless other units are shown.

STANDARD PLAN NUMBER **606-2**

SHEET 12 of 18

Issued by: ENGINEERING SERVICES

Date Issued: OCTOBER 2013

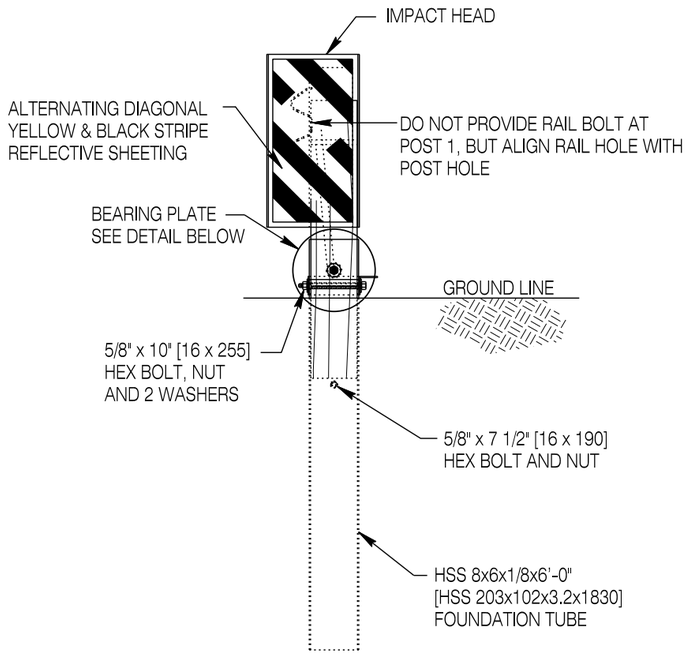

POST 1

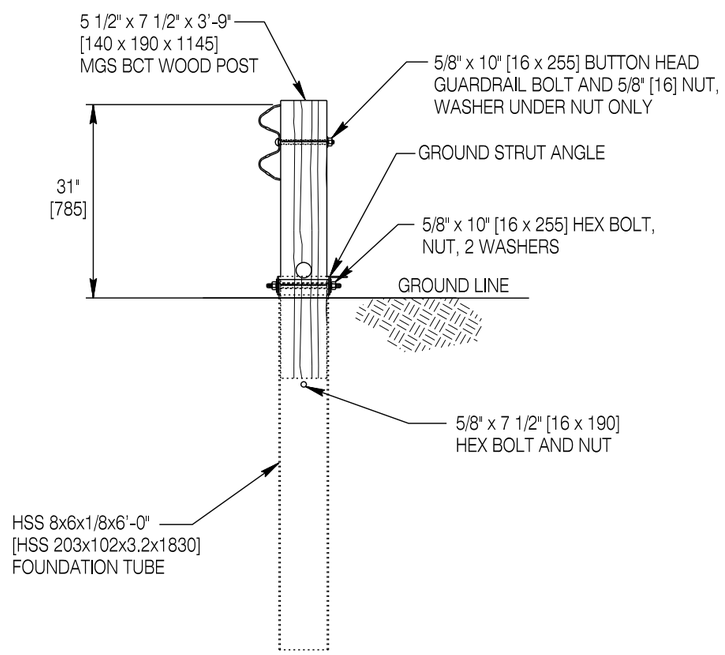

POST 2

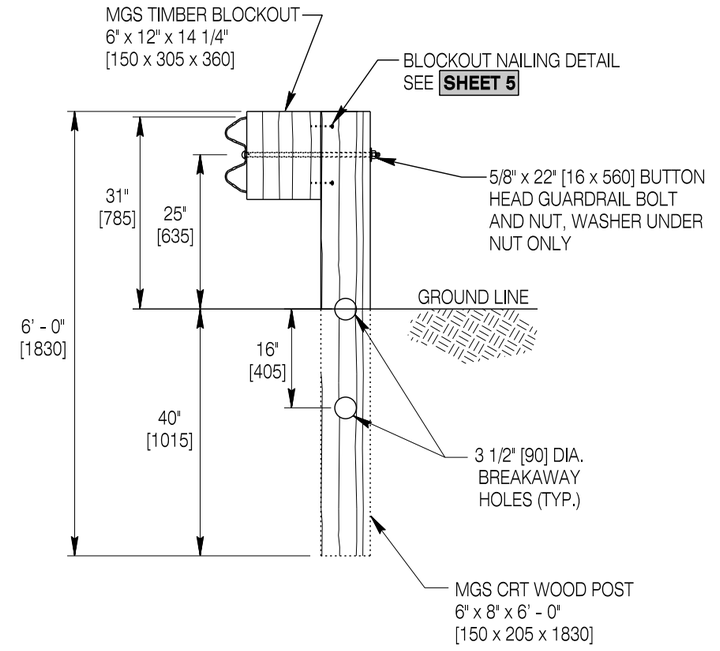

POST 3 THRU 8

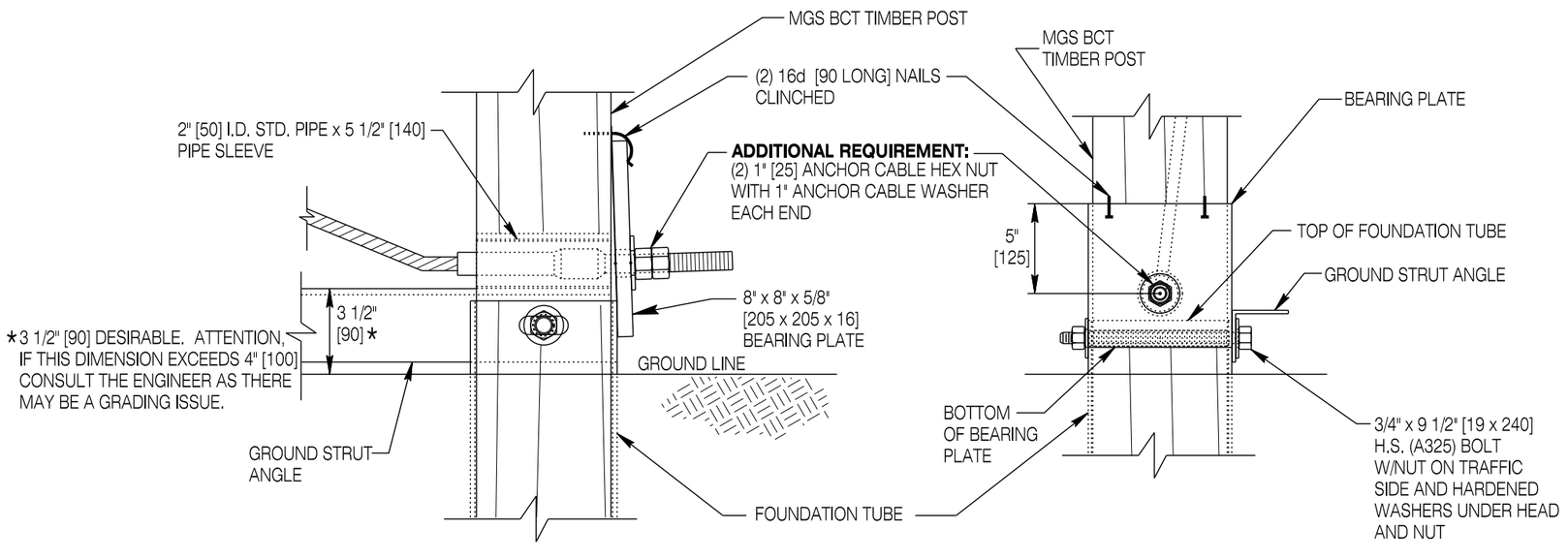

CABLE ANCHORAGE AND GROUND STRUT DETAILS

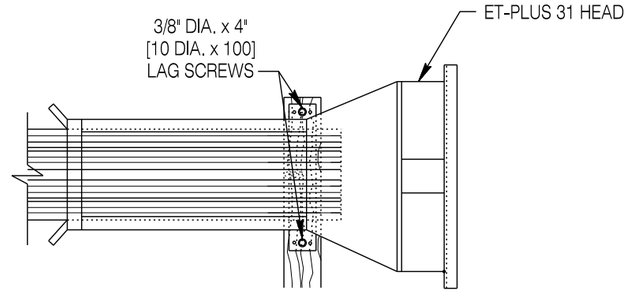

SIDE VIEW

ET-31 IMPACT HEAD POST ATTACHMENT DETAIL

Designed by: WBW Drawn by: JK Checked by: WBW Previous Dwg. No. NEW	TERMINAL TYPE I (OPTION 2 - ET-31, SHEET 2 OF 2)	WYOMING DEPARTMENT OF TRANSPORTATION	MGS GUARDRAIL STANDARD PLAN
Note: Units shown in brackets [ ] are metric and are in millimeters (mm) unless other units are shown.			STANDARD PLAN NUMBER 606-2 SHEET 13 of 18 Issued by: ENGINEERING SERVICES Date Issued: OCTOBER 2013

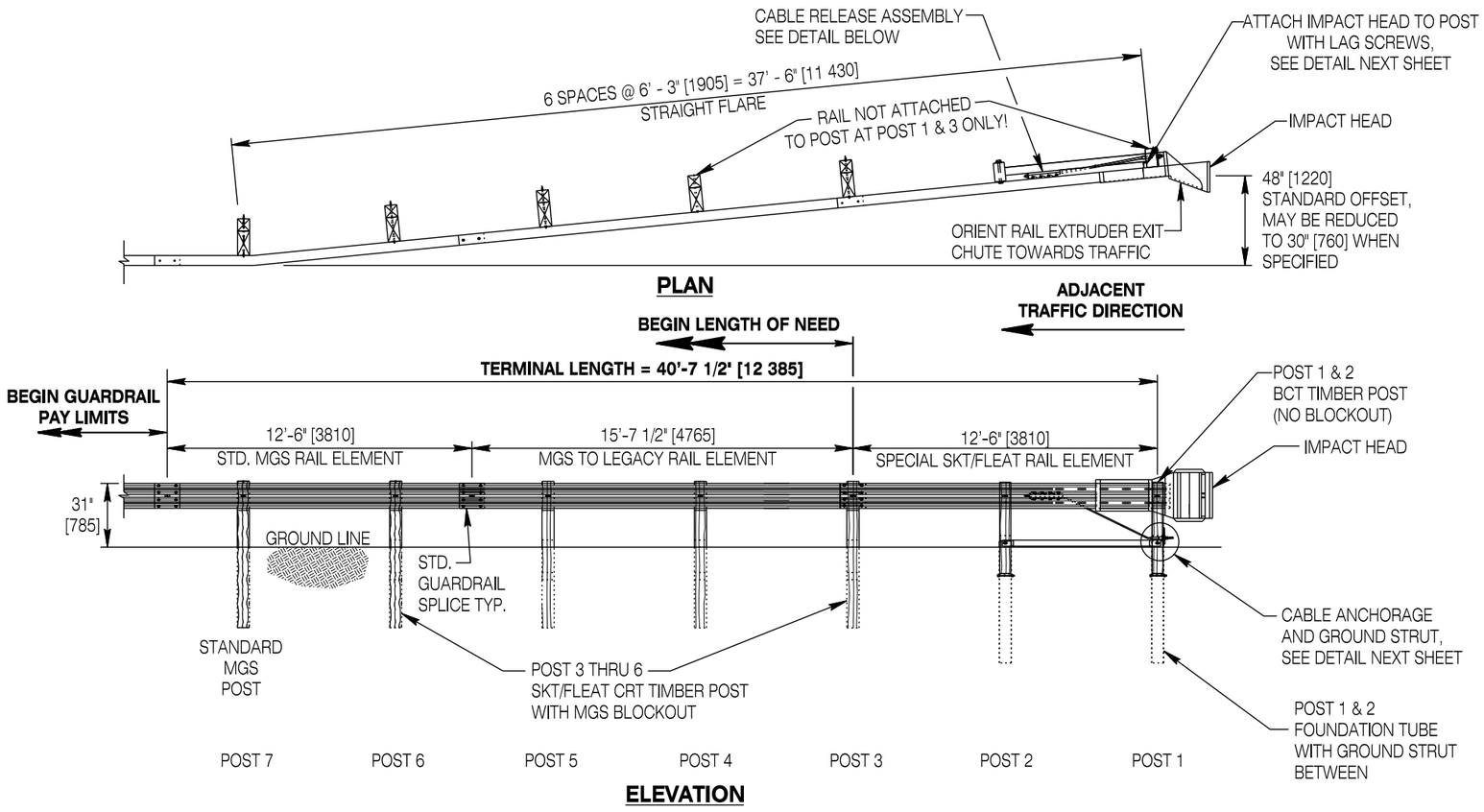

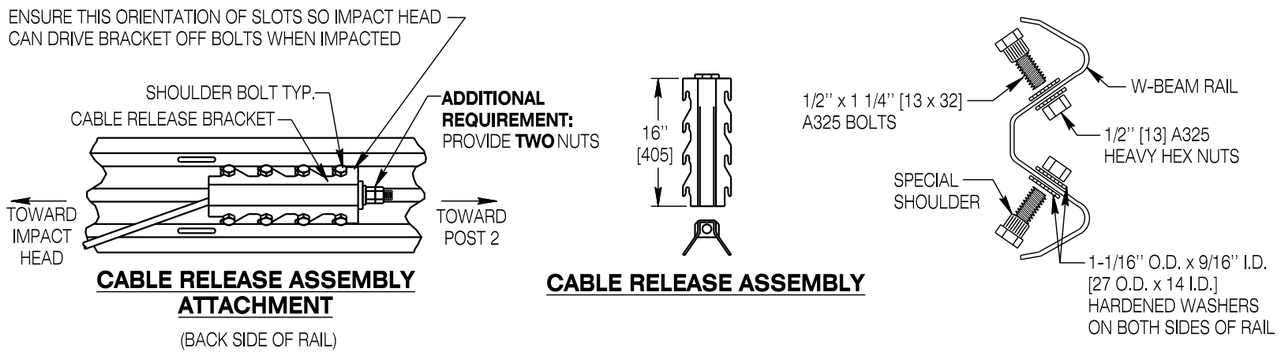

CABLE RELEASE ASSEMBLY DETAILS

NOTES

① The FLEAT MGS Terminal as shown herein is an acceptable option when "MGS Terminal Type II" is specified unless otherwise indicated in the contract.

The FLEAT MGS Terminal shown herein is proprietary and can only be manufactured and sold by Road Systems Inc. or its duly authorized representative.

Install in strict accordance to the manufacturer's installation manual and adhere to all warnings.

Any items shown as an "additional requirement" are over and above the manufacturer's standard product requirements.

Summary of additional requirements for the FLEAT MGS:

A. Double nut each end of the cable anchor to prevent loosening.

② Provide the offset flare of 4 ft. [1.2 m] shown herein applied to the tangent line of the adjacent run of guardrail whether flared or parallel to the roadway. The offset flare may be reduced to 2 1/2 ft. [0.8] when specified.

③ Lap the upstream rail (for the adjacent traffic direction) over the downstream rail element at each splice. See rail lap detail on **SHEET 5**.

④ Attach impact head to post 1 as shown. Do not provide rail attachment bolt at post 1. Ensure rail hole aligns with post hole at post 1. Provide rail/post bolt at post 3 to secure blockout only, but do not attach the rail to the blockout (post bolt head is behind the rail element at post 3 only.

⑤ Drive soil tubes with an approved driving head which does not deform tubes. If the tubes are placed in drilled holes, place and compact backfill in lifts to prevent settlement.

⑥ The foundation tubes should not protrude more than 4 in. [100] above ground line. Correct site grading when necessary as directed by the engineer.

⑦ Ensure the cable anchor assembly is taut. Use a locking device (vice grips or channel locking pliers) to prevent twisting or untwisting of the cable when tightening nuts.

⑧ Ensure all bolts, nuts, cable assemblies, cable anchors and bearing plates are galvanized or coated to prevent corrosion.

Designed by: WBW	TERMINAL TYPE II (OPTION 1 - FLEAT MGS, SHEET 1 OF 2)
Drawn by: JK	
Checked by: WBW	
Previous Dwg. No. NEW	

Note: Units shown in brackets [ ] are metric and are in millimeters (mm) unless other units are shown.

WYOMING DEPARTMENT OF TRANSPORTATION

MGS GUARDRAIL

STANDARD PLAN

STANDARD PLAN NUMBER
606-2
SHEET 14 of 18
Issued by: ENGINEERING SERVICES
Date Issued: OCTOBER 2013

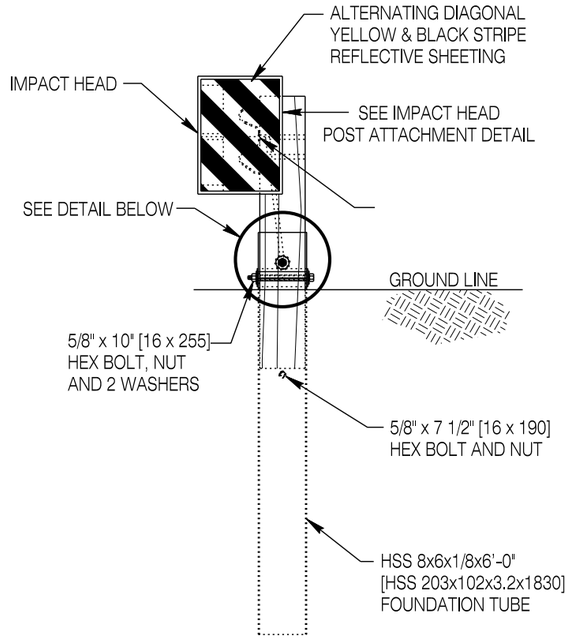

POST 1

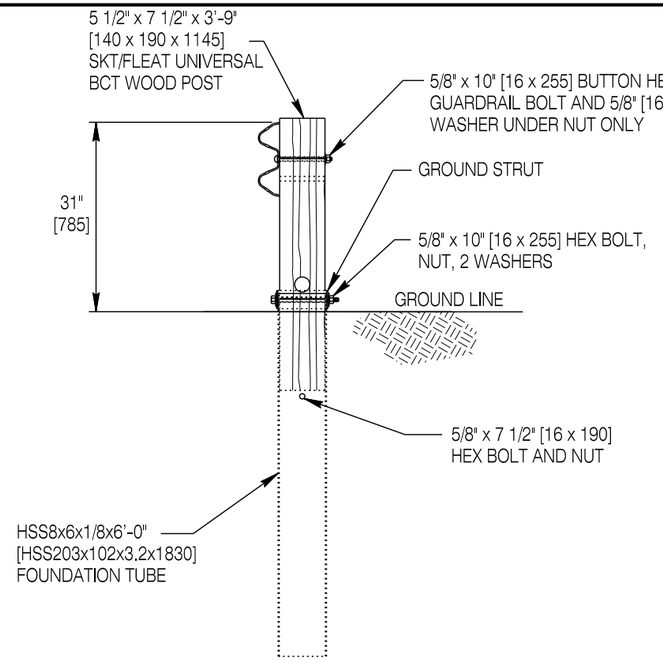

POST 2

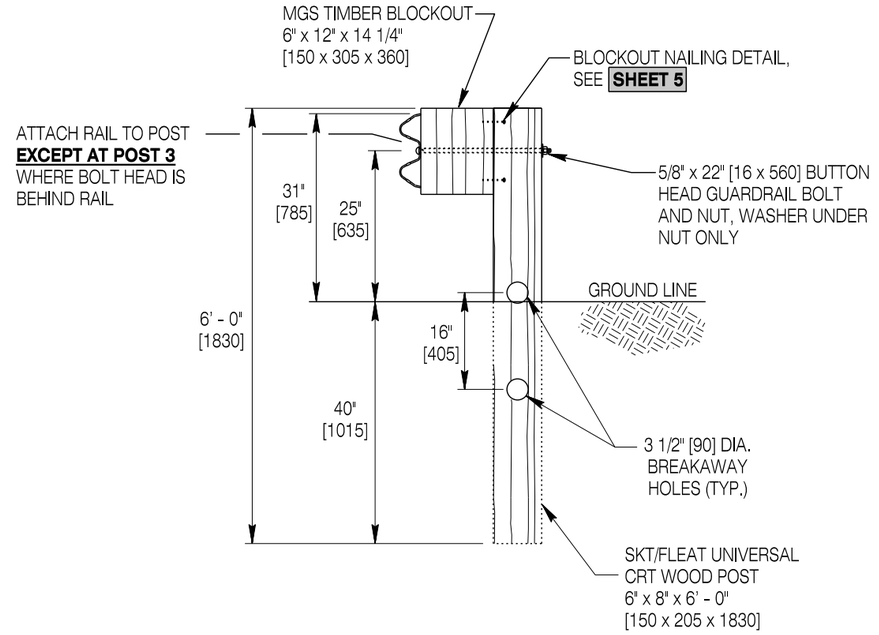

POST 3 THRU 8

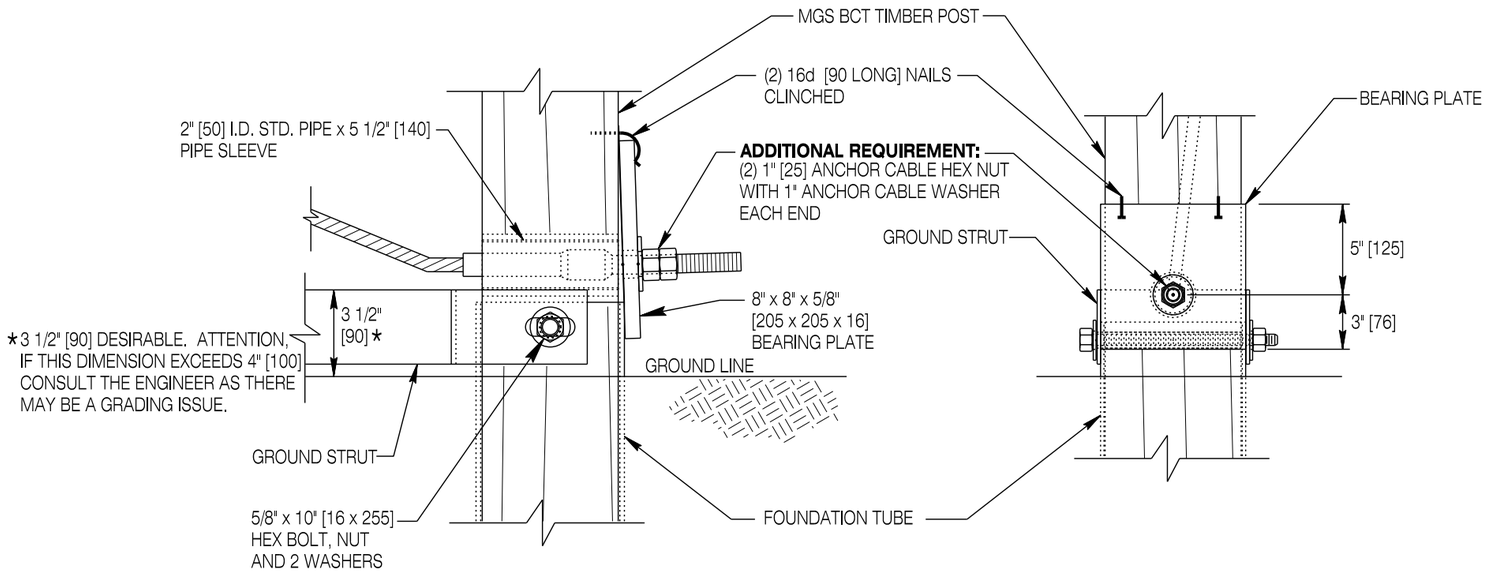

CABLE ANCHORAGE AND GROUND STRUT DETAILS

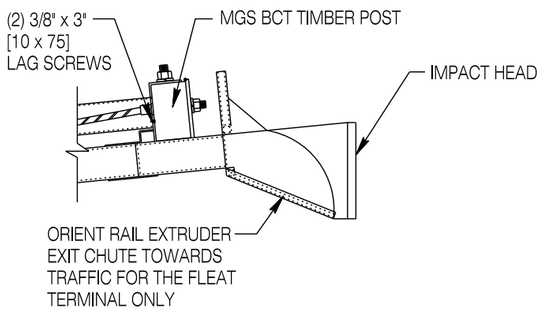

TOP VIEW

FLEAT IMPACT HEAD POST ATTACHMENT DETAIL

Designed by:	WBW
Drawn by:	JK
Checked by:	WBW
Previous Dwg. No.	NEW

TERMINAL TYPE II (OPTION 1 - FLEAT MGS, SHEET 2 OF 2)

Note: Units shown in brackets [ ] are metric and are in millimeters (mm) unless other units are shown.

WYOMING DEPARTMENT OF TRANSPORTATION

MGS GUARDRAIL

STANDARD PLAN

STANDARD PLAN NUMBER
606-2
SHEET 15 of 18
Issued by: ENGINEERING SERVICES
Date Issued: OCTOBER 2013

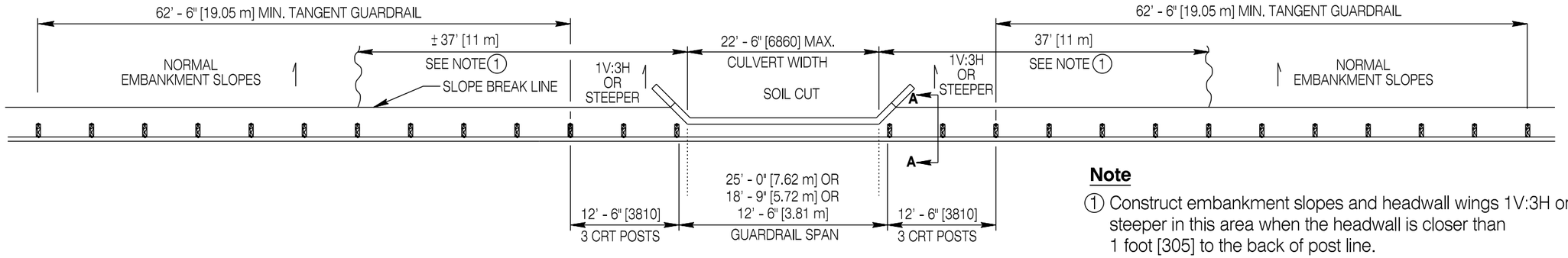

PLAN VIEW

Note

(1) Construct embankment slopes and headwall wings 1V:3H or steeper in this area when the headwall is closer than 1 foot [305] to the back of post line.

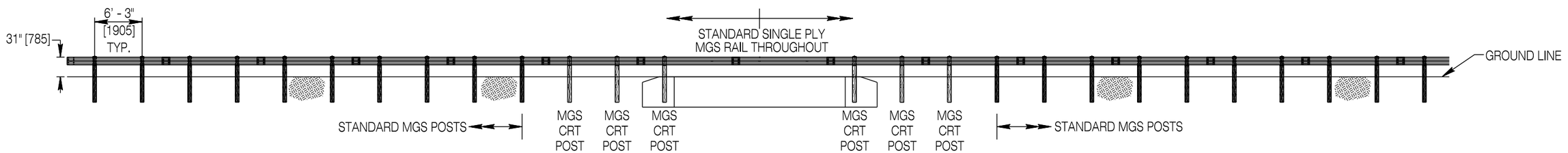

ELEVATION VIEW

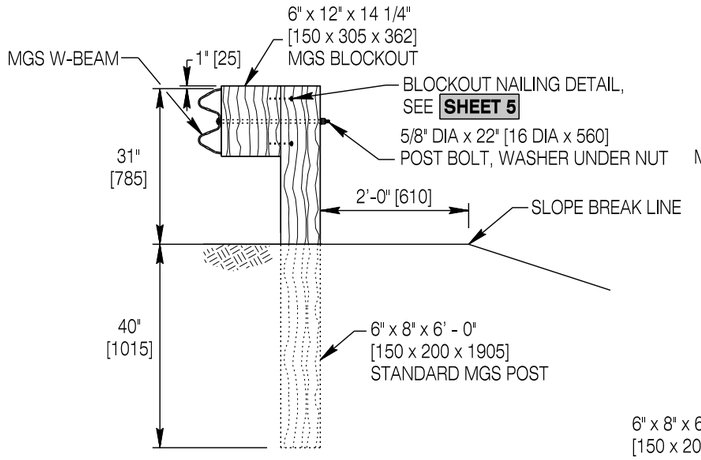

STANDARD MGS POST

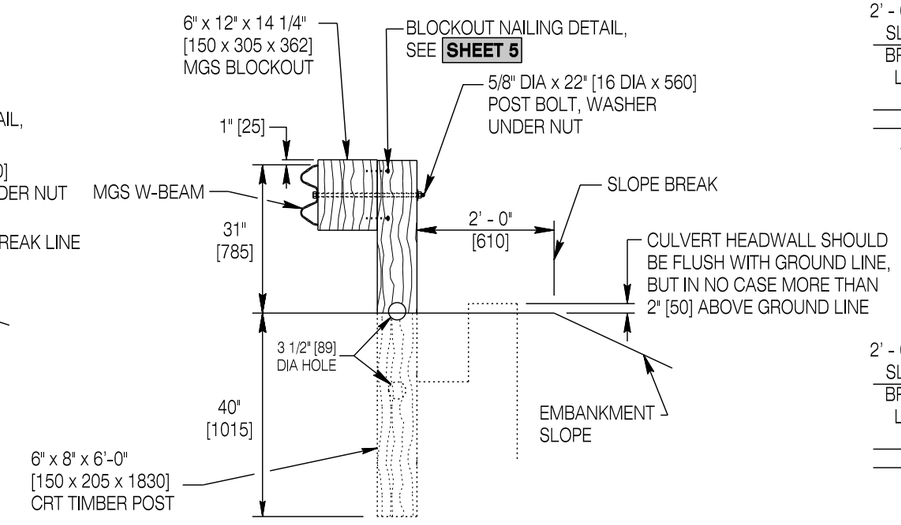

SECTION A-A CRT POSTS TYP.

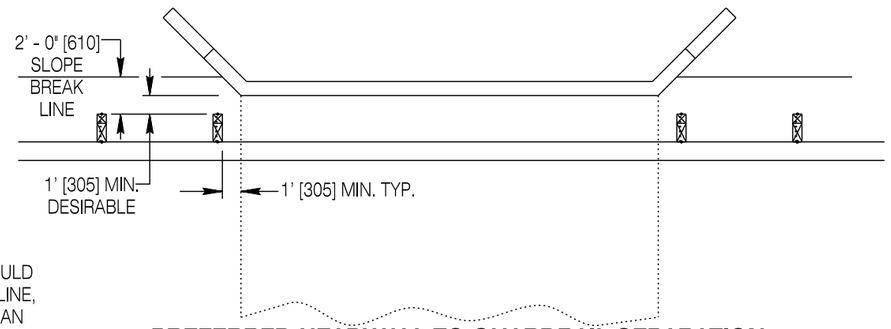

PREFERRED HEADWALL TO GUARDRAIL SEPARATION

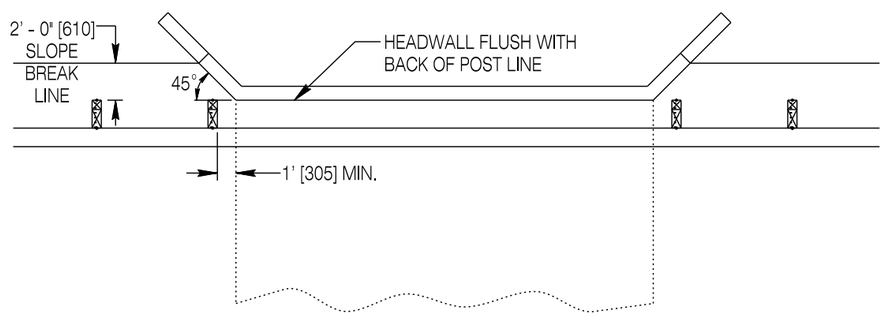

MINIMUM HEADWALL TO GUARDRAIL SEPERATION

Designed by: WBW	MGS LONG SPAN
Drawn by: JK	
Checked by: WBW	
Previous Dwg. No. NEW	

Note: Units shown in brackets [ ] are metric and are in millimeters (mm) unless other units are shown.

WYOMING DEPARTMENT OF TRANSPORTATION

MGS GUARDRAIL

STANDARD PLAN

STANDARD PLAN NUMBER
606-2
SHEET 16 of 18
Issued by: ENGINEERING SERVICES
Date Issued: OCTOBER 2013

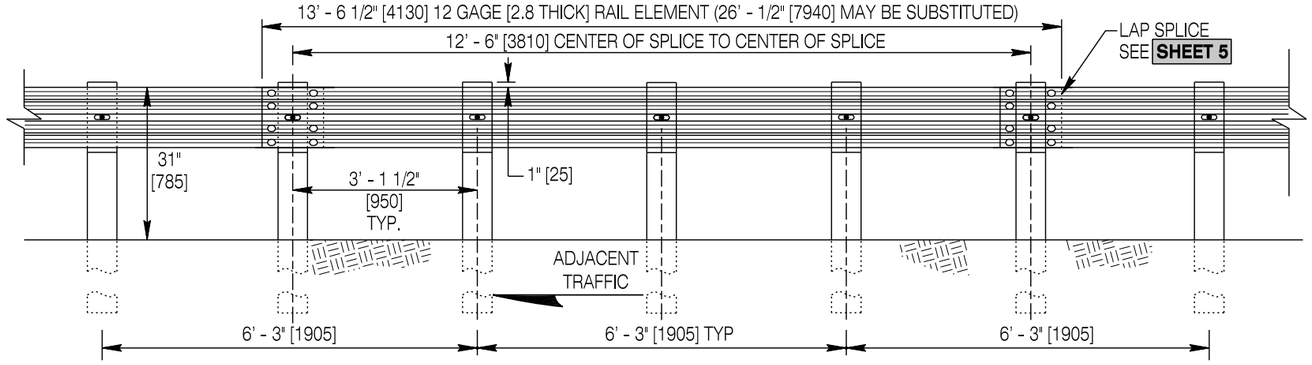

MGS HALF POST SPACING

Use standard 6' - 0" [1830] long posts, wood or steel unless specified otherwise.
Working width = 4' - 0" [1.2 m].

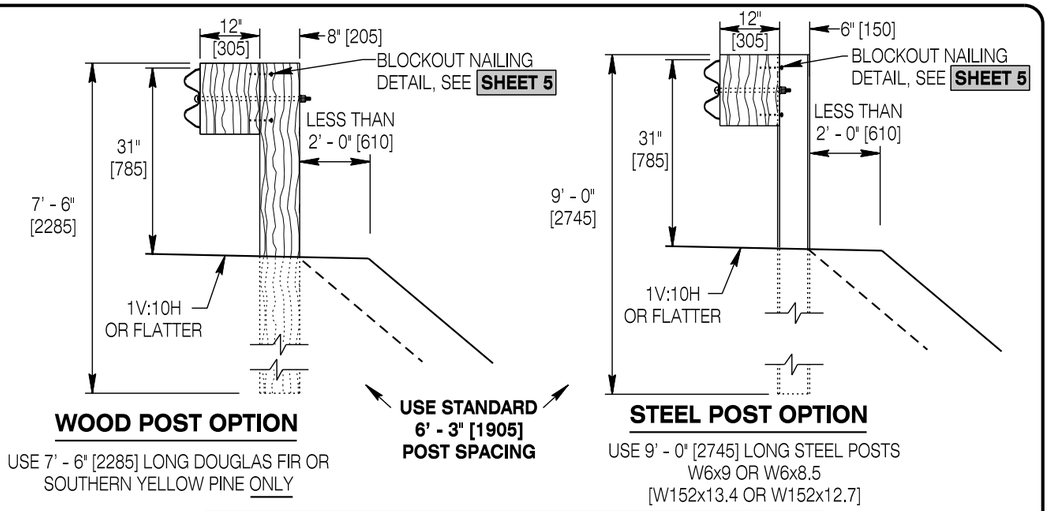

WOOD POST OPTION

USE 7' - 6" [2285] LONG DOUGLAS FIR OR SOUTHERN YELLOW PINE ONLY

STEEL POST OPTION

USE 9' - 0" [2745] LONG STEEL POSTS W6x9 OR W6x8.5 [W152x13.4 OR W152x12.7]

MGS LONG POST - CONSTRICTED SLOPE GRADING

For locations where the slope break point is less than 2'-0" [610] behind the guardrail posts.

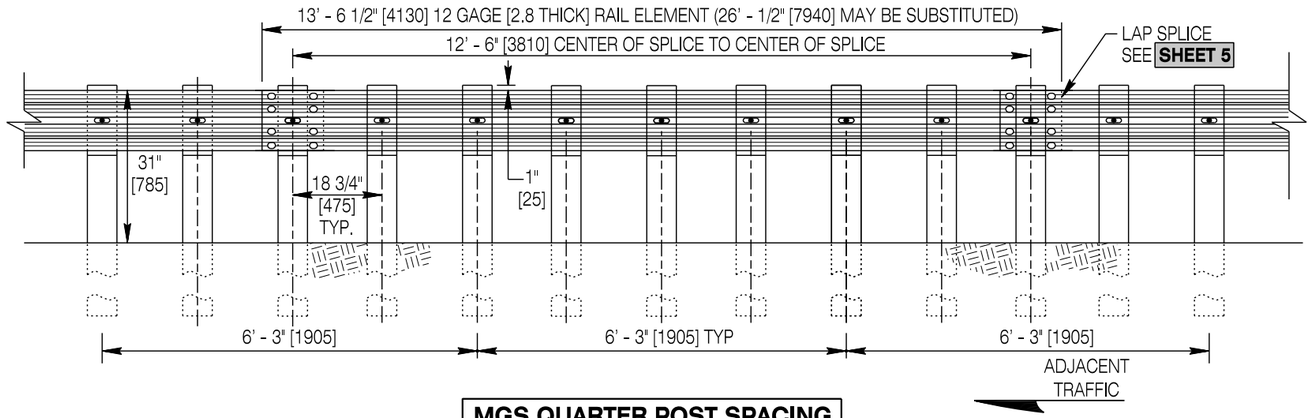

MGS QUARTER POST SPACING

Use standard 6' - 0" [1830] long posts, wood or steel unless specified otherwise.
Factory punch holes at quarter post spacing.
Working width = 3' - 0" [0.9 m].

GENERAL NOTE

① Requirements on SHEET 5 apply herein except where in conflict with these details.

STANDARD GUARDRAIL BOLTS	
*DESIGNATOR	
FBB03	5/8" x 10" [16 x 255] BUTTON HEAD GUARDRAIL BOLT WITH WASHER UNDER NUT
FBB04	5/8" x 18" [16 x 455] BUTTON HEAD GUARDRAIL BOLT WITH WASHER UNDER NUT
FWC16a	ROUND WASHER FOR 5/8" [16] GUARDRAIL BOLT

* TASK FORCE13 STANDARD BARRIER GUIDE

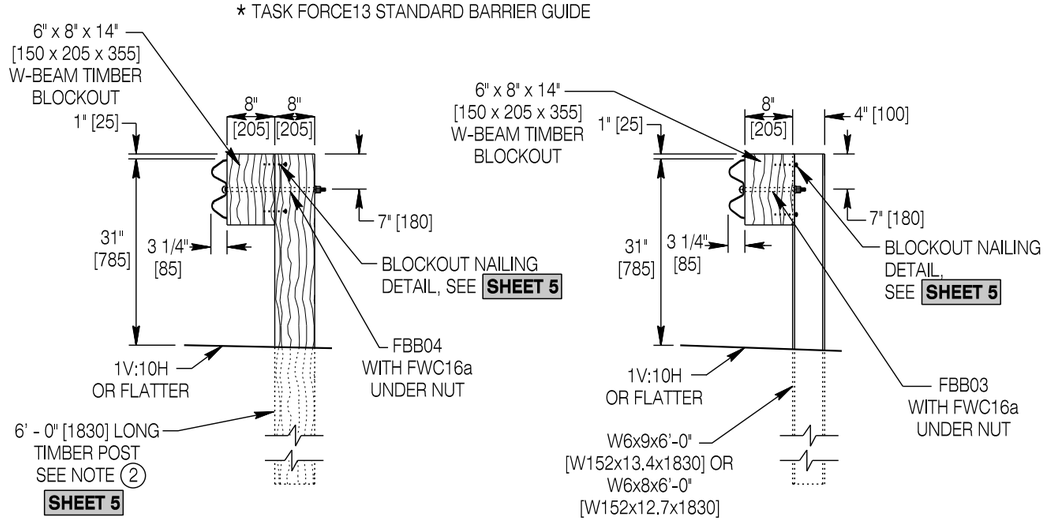

WOOD POST OPTION

STEEL POST OPTION

MGS 8" [205] BLOCKS

To be used only on narrow roadways where 12" [305] block-outs will not fit!

Designed by:	WBW
Drawn by:	JK
Checked by:	WBW
Previous Dwg. No.	NEW

MGS HALF POST SPACING, MGS QUARTER POST SPACING,
MGS LONG POST-CONSTRICTED SLOPE GRADING, MGS 8" [205] BLOCKS

Note: Units shown in brackets [ ] are metric and are in millimeters (mm) unless other units are shown.

WYOMING DEPARTMENT OF TRANSPORTATION

MGS GUARDRAIL

STANDARD PLAN

STANDARD PLAN NUMBER
606-2
SHEET 17 of 18
Issued by: ENGINEERING SERVICES
Date Issued: OCTOBER 2013

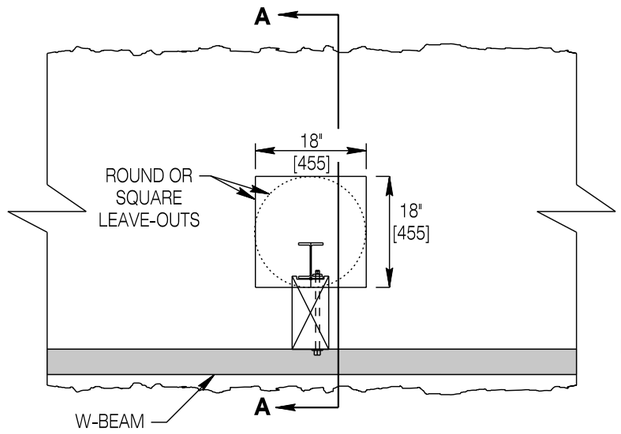

PLAN VIEW

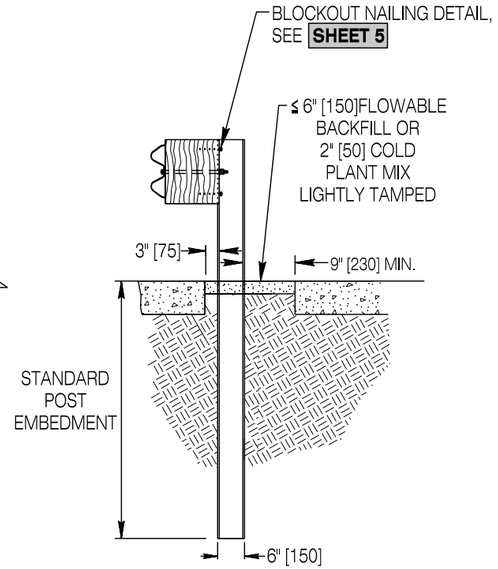

SECTION A-A

STEEL POST DETAIL

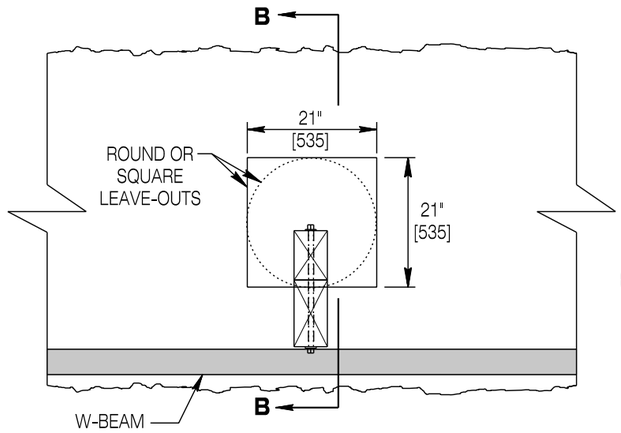

PLAN VIEW

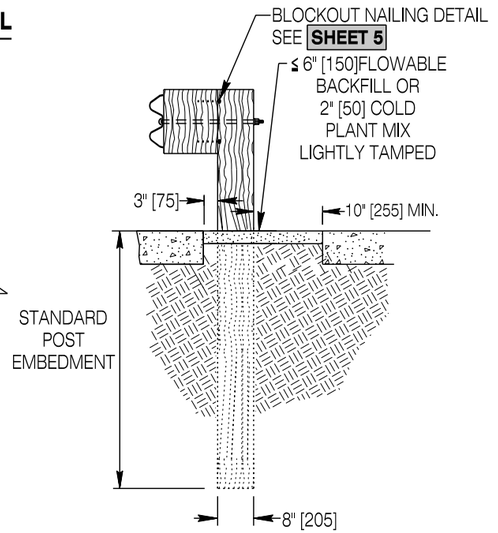

SECTION B-B

WOOD POST DETAIL

POST PLACEMENT IN ASPHALT OR CONCRETE PAVEMENTS

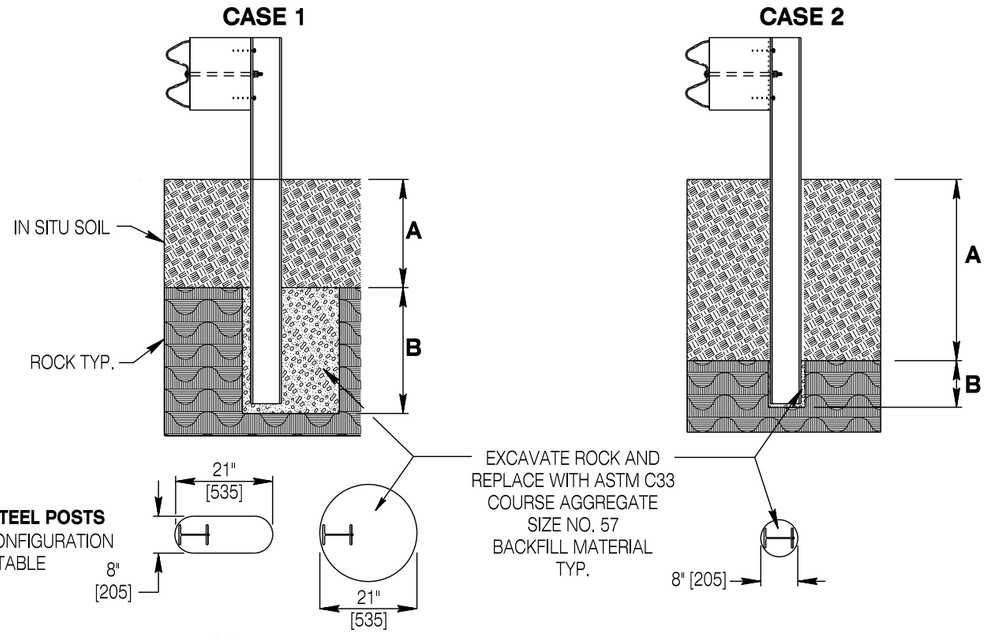

CASE 1 - A ≤ 18" [455]

For overlying soil depths (A) ranging from 0 to 18" [0 to 455], the depth of required drilling (B) is equal to 24" [610].

CASE 2 - A > 18" [455]

For overlying soil depths (A) ranging from > 18" [455], to the embedment depth of the post, depth of required drilling (B) is equal to either 12" [305] or the standard embedment depth minus the depth of soil which ever is less.

POSTS IN ROCK

Designed by: WBW Drawn by: JK Checked by: WBW Previous Dwg. No. NEW	POST PLACEMENT IN PAVEMENTS AND ROCK	WYOMING DEPARTMENT OF TRANSPORTATION	STANDARD PLAN NUMBER 606-2 SHEET 18 of 18 Issued by: ENGINEERING SERVICES Date Issued: OCTOBER 2013

Note: Units shown in brackets [ ] are metric and are in millimeters (mm) unless other units are shown.

MGS GUARDRAIL

STANDARD PLAN